TRAINEE'S GUIDE

for

ELECTRONICS TECHNICIANS

CLASS C

(SEIC COURSE)

AN/SRT Radio Transmitter

Schematics

AN/SRT-14

Bureau of Naval Personnel

September 1966

AN/SRT-14

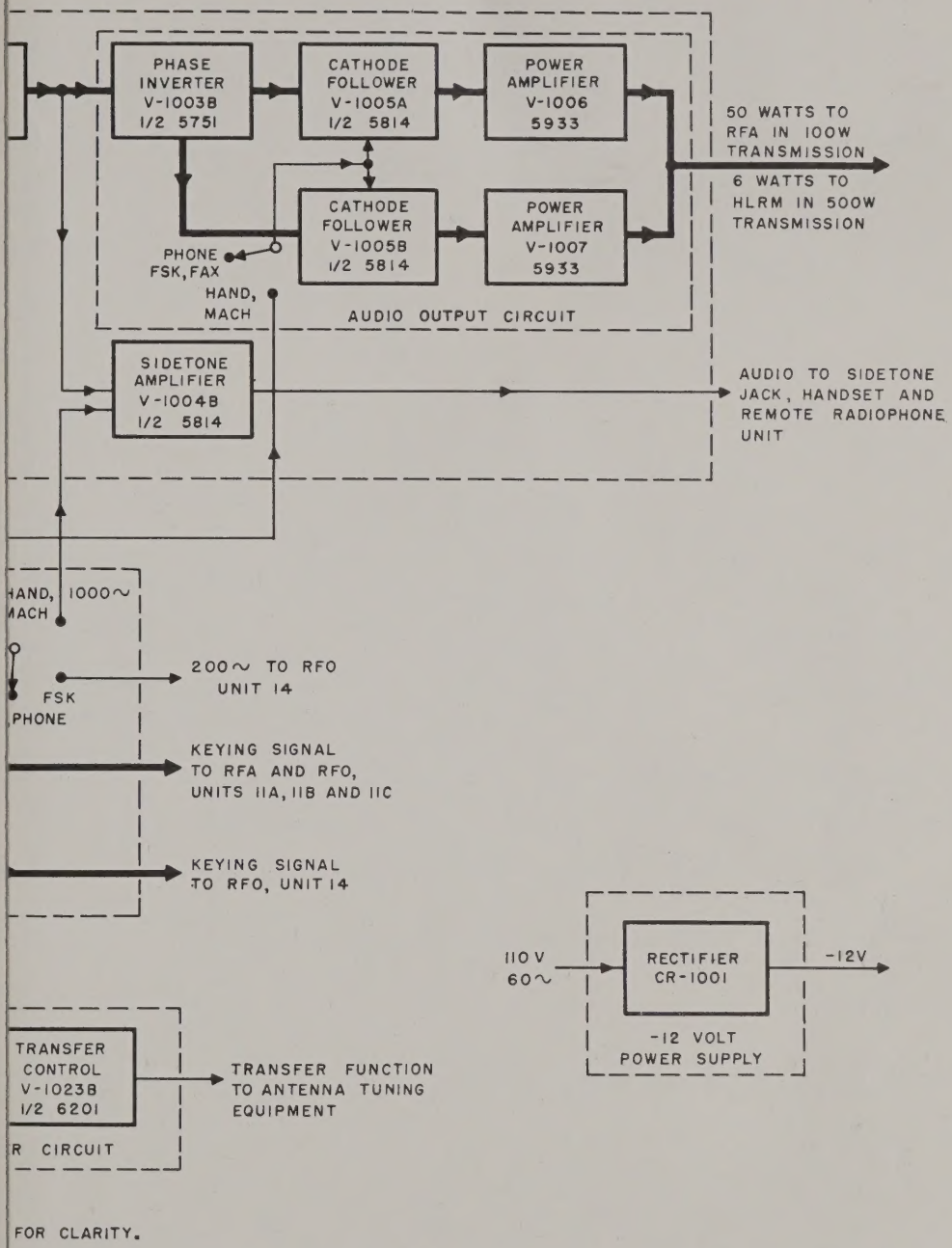

Figure 2–130. Radio Modulator MD–229/SRT (Low Level Radio Modulator, LLRM) Functional Block Diagram

AN/SRT-14

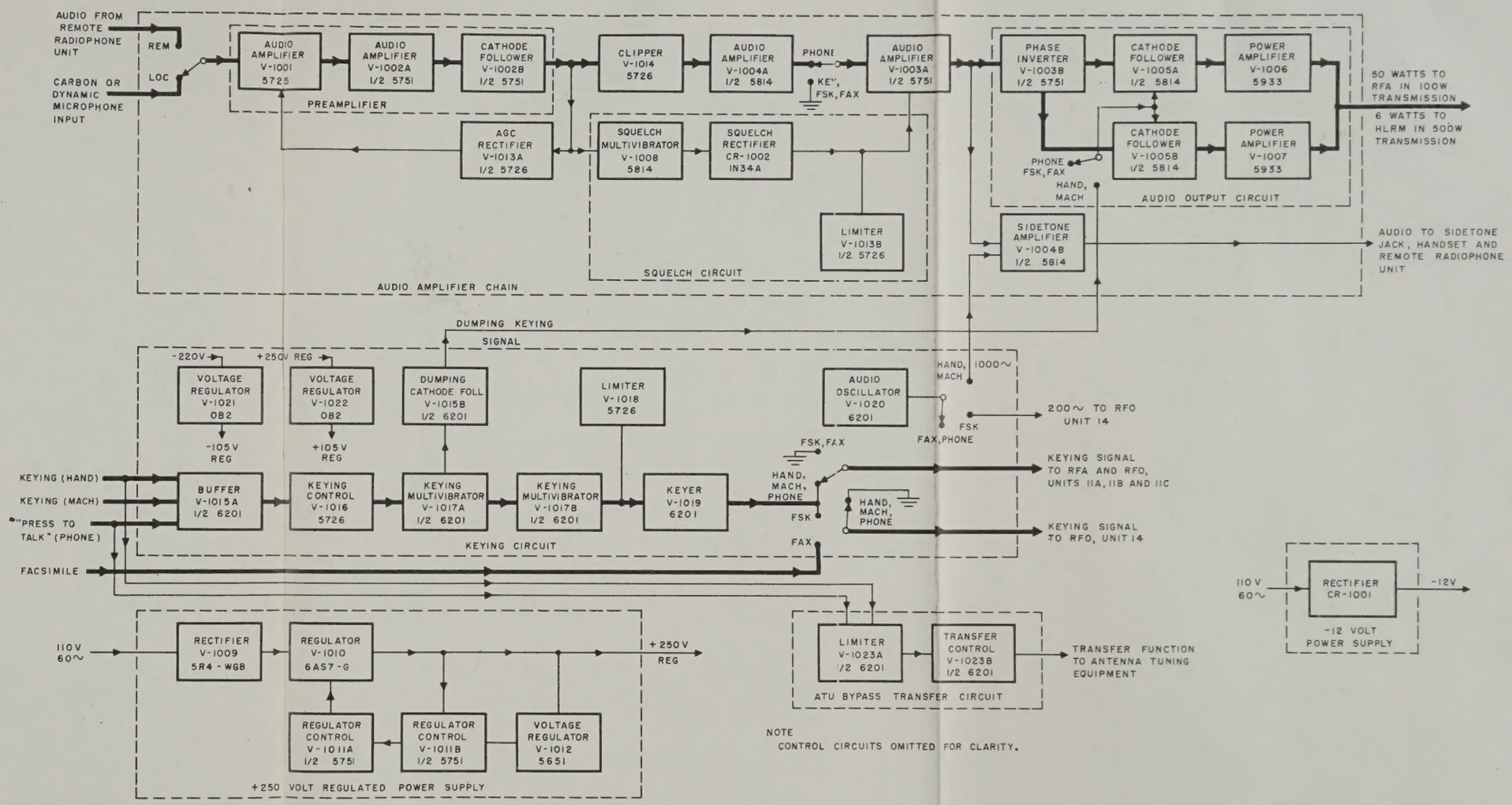

Figure 2-130. Radio Modulator MD-229/SRT (Low Level Radio Modulator, LLRM) Functional Block Diagram

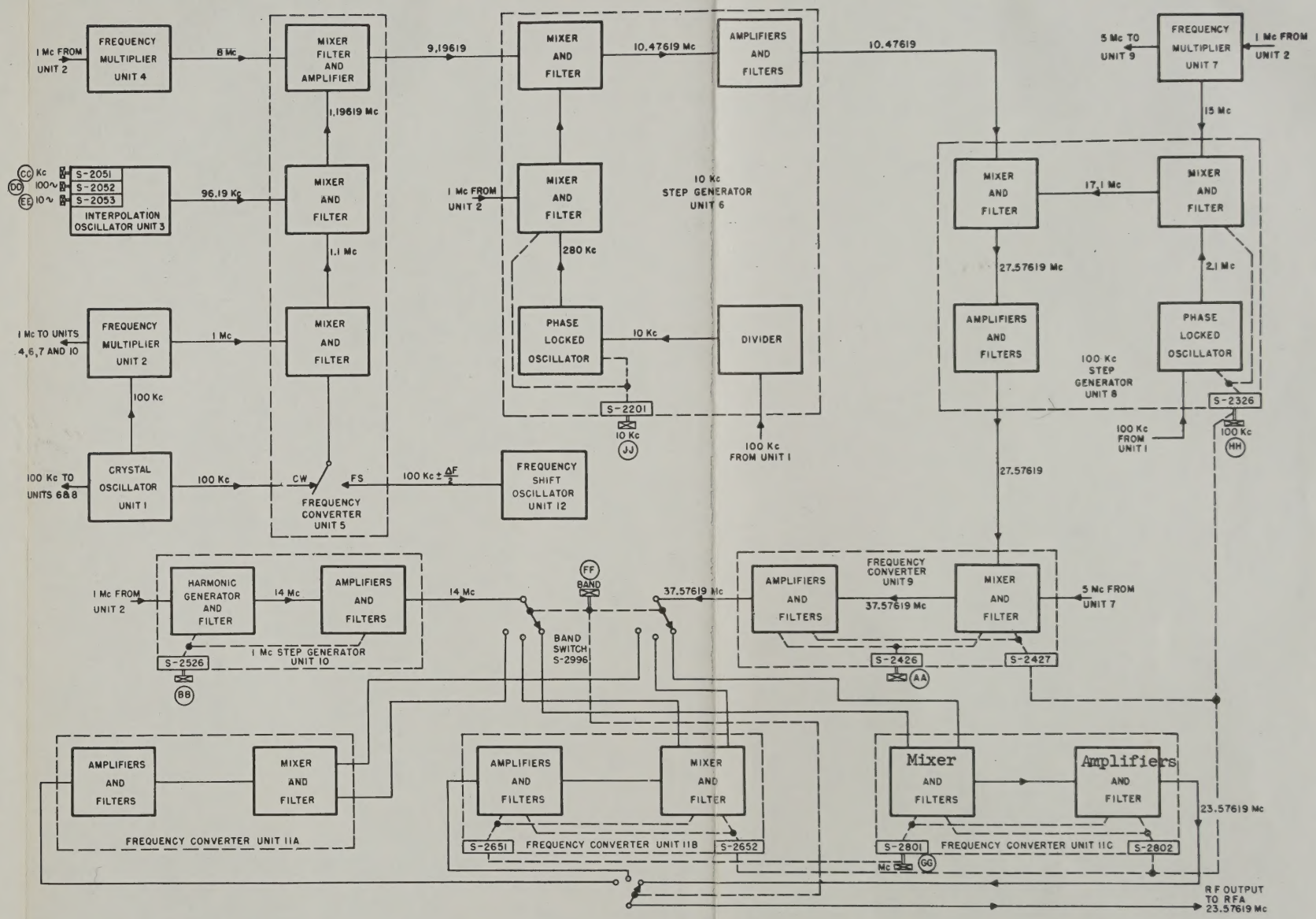

Figure 2—131. RFO Producing 23.57619 Mc, Functional Block Diagram

NOTES:

1. IN AN/SRT-16, THE HEATERS IN THE TWO MOUNTINGS ARE INDIVIDUALLY ENERGIZED FROM THE CABINET HEATER SWITCH ⊖ IN EACH TRANSMITTER GROUP. IN AN/SRT-15 THE HEATERS IN THE TWO MOUNTINGS ARE IN PARALLEL.
2. RESISTANCE VALUES EXPRESSED IN OHMS UNLESS OTHERWISE INDICATED.
3. SEE ANTENNA COUPLER AND RADIO FREQUENCY TUNER CONTROL CIRCUITS FOR INTERCONNECTING DATA BETWEEN TRANSMITTER GROUP AND ANTENNA COUPLER.
4. COLOR CODE:—R-RED, Y-YELLOW, GR-GREEN, BU-BLUE.
5. ⬭ DENOTES INTERCONNECTING CABLING, FOR DETAILS SEE INTERCONNECTING CABLING DIAGRAMS IN SECTION 3 OF INSTRUCTION BOOK.
6. OTHER CORRECTIONS IN 500 W STACK ARE THE SAME AS 100 W STACK.
7. IN AN/SRT-14, JUMPERS ARE PLACED BETWEEN E606(76) AND E606 (77) AND BETWEEN E606(1) AND E606(2).

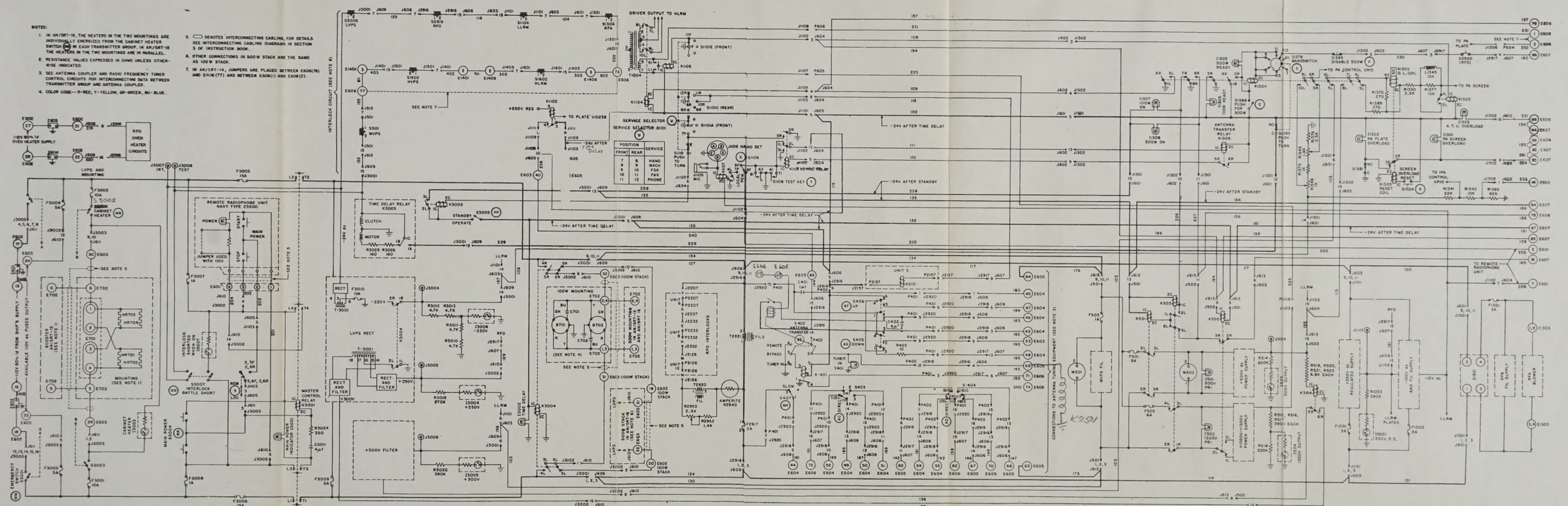

Figure 7—114. Transmitter Group OA-684/SRT and Mounting MT-1423/SRT, Control Circuit, Simplified Schematic

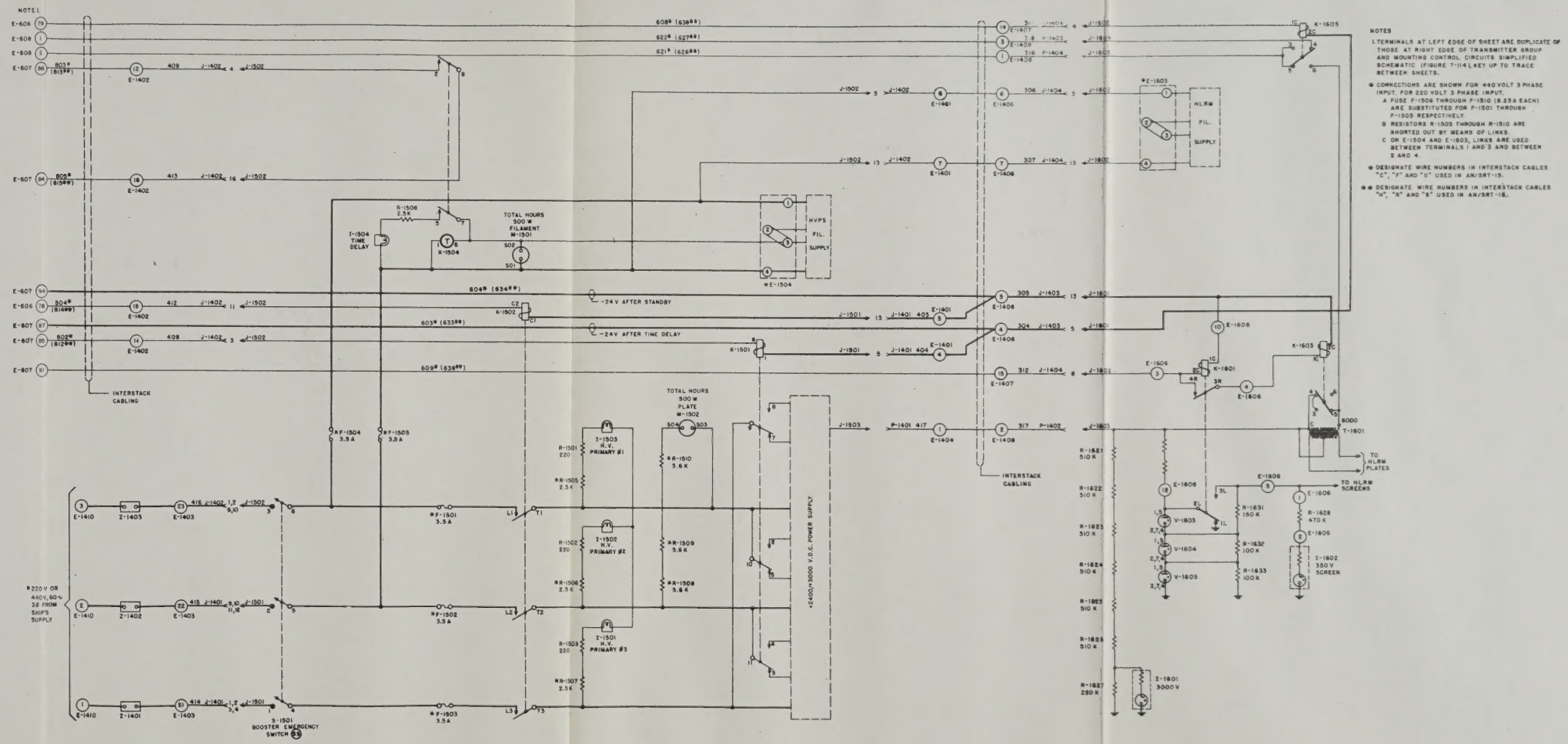

Figure 7—115. Radio Modulator-Power Supply Group OA—885/SRT, Control Circuits, Simplified Schematic

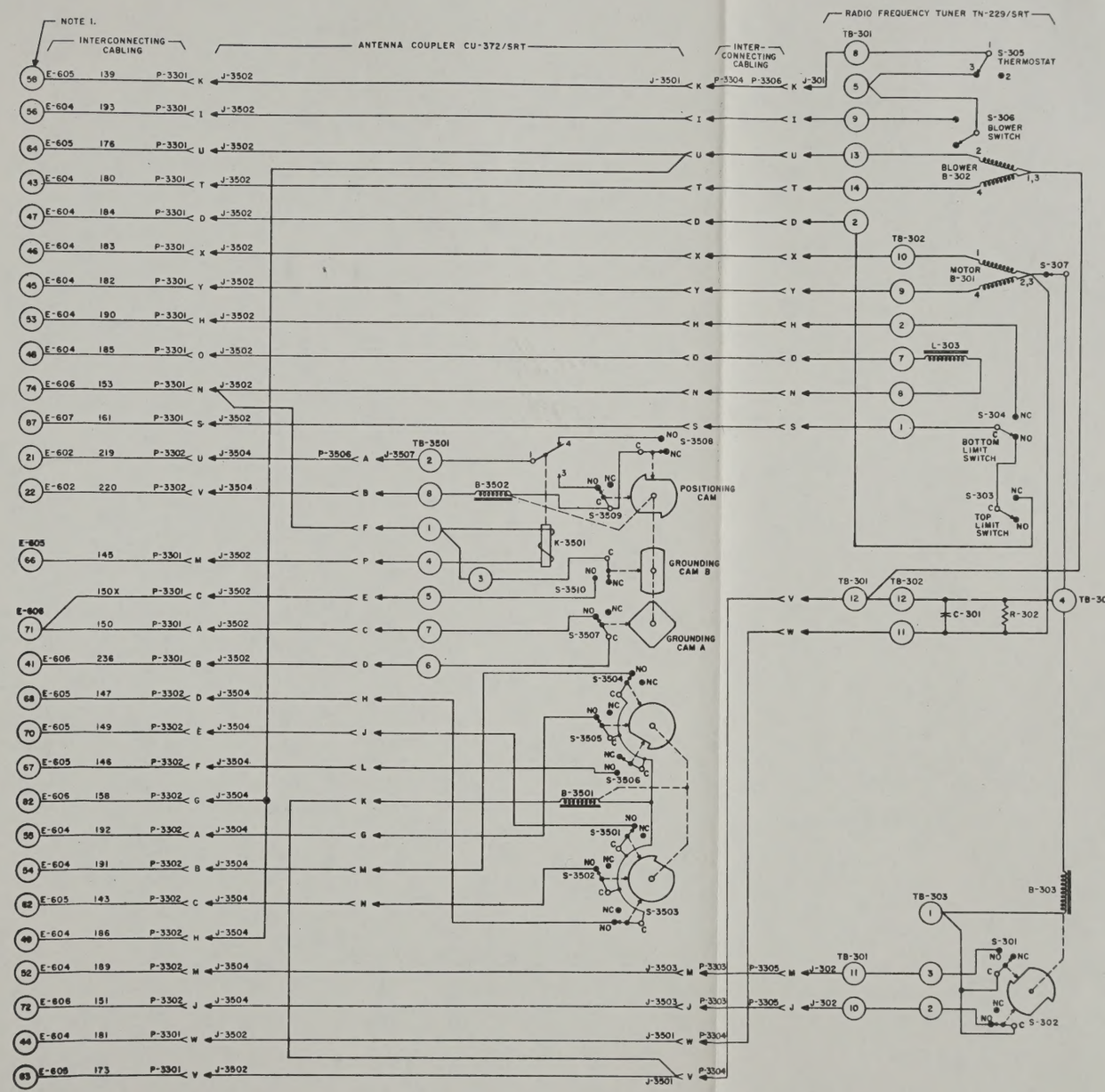

NOTES:—

1. TERMINALS AT LEFT EDGE OF SHEET ARE DUPLICATE OF THOSE FOUND ON THE TRANSMITTER GROUP AND MOUNTING CONTROL CIRCUITS SIMPLIFIED SCHEMATIC (FIGURE 7-114). TO TRACE ANY CIRCUIT MATCH TERMINAL NUMBERS ON EACH DRAWING.

Figure 7—116. Antenna Coupler CU—372/SRT, and R-F Tuner TN—229/SRT, Control Circuits, Simplified Schematic

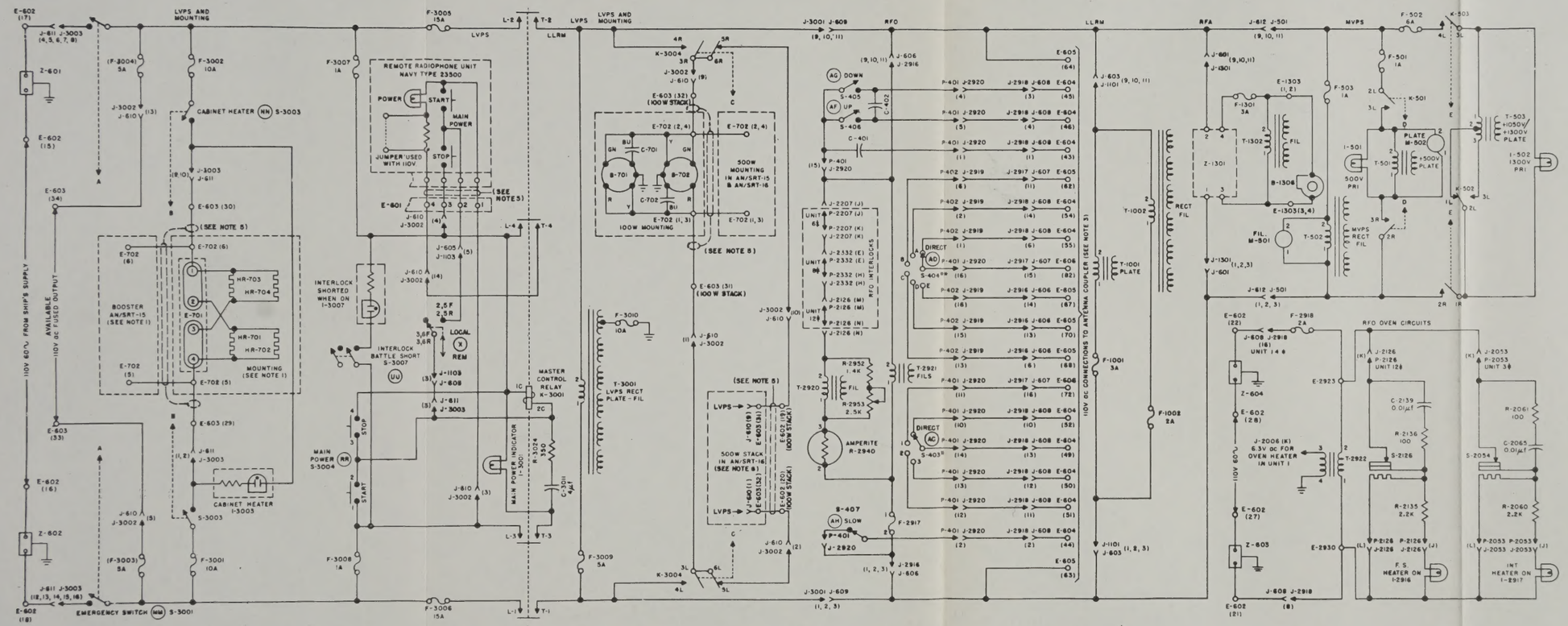

ABBREVIATION	COMMON NAME	OFFICIAL DESIGNATION	SYMBOL GROUP
LVPS	LOW VOLTAGE POWER SUPPLY	PP-1094/SRT	3001-3099
MVPS	MEDIUM VOLTAGE POWER SUPPLY	PP-1095/SRT	501-599
RFO	RADIO FREQUENCY OSCILLATOR	O-275/SRT	401-499 2001-2999
LLRM	LOW LEVEL RADIO MODULATOR	MD-229/SRT	1001-1299
RFA	RADIO FREQUENCY AMPLIFIER	AM-1008/SRT	1301-1399
	TRANSMITTER GROUP CABINET	CY-1571/SRT	601-699
	MOUNTING	MT-1423/SRT	

NOTES:

1. IN AN/SRT-16 THE HEATERS IN THE TWO MOUNTINGS ARE INDIVIDUALLY ENERGIZED FROM THE CABINET HEATER SWITCH (NN) IN EACH TRANSMITTER GROUP. IN AN/SRT-15 THE HEATERS IN THE TWO MOUNTINGS ARE IN PARALLEL.
2. RESISTANCE VALUES EXPRESSED IN OHMS UNLESS OTHERWISE INDICATED.
3. SEE PRIMARY POWER DISTRIBUTION DIAGRAM, ANTENNA COUPLER AND RADIO FREQUENCY TUNER FOR INTERCONNECTING DATA FOR PRIMARY POWER BETWEEN TRANSMITTER GROUP AND ANTENNA COUPLER.
4. COLOR CODE—R-RED, Y-YELLOW, GN-GREEN, BU-BLUE.
5. ⟨⟨⟨⟨⟨⟨ DENOTES INTERCONNECTING CABLING. FOR DETAILS SEE INTERCONNECTING CABLING DIAGRAMS IN SECTION 3.
6. OTHER CONNECTIONS IN 500 W STACK ARE THE SAME AS 100 W STACK.
7. UNIT 1, UNIT 3, UNIT 6, ETC. REFER TO PLUG-IN UNITS OF THE RADIO FREQUENCY OSCILLATOR, O-275/SRT
8. * FRONT PANEL DESIGNATION OF S-403 IS AS FOLLOWS; TRANSFORMER (AC)
9. ** FRONT PANEL DESIGNATION OF S-404 IS AS FOLLOWS; ANTENNA COUPLER LOADING (AD)

Figure 7—117. Primary Power Distribution Diagram, Transmitter Group and Mounting, AN/SRT-14, 15 and 16

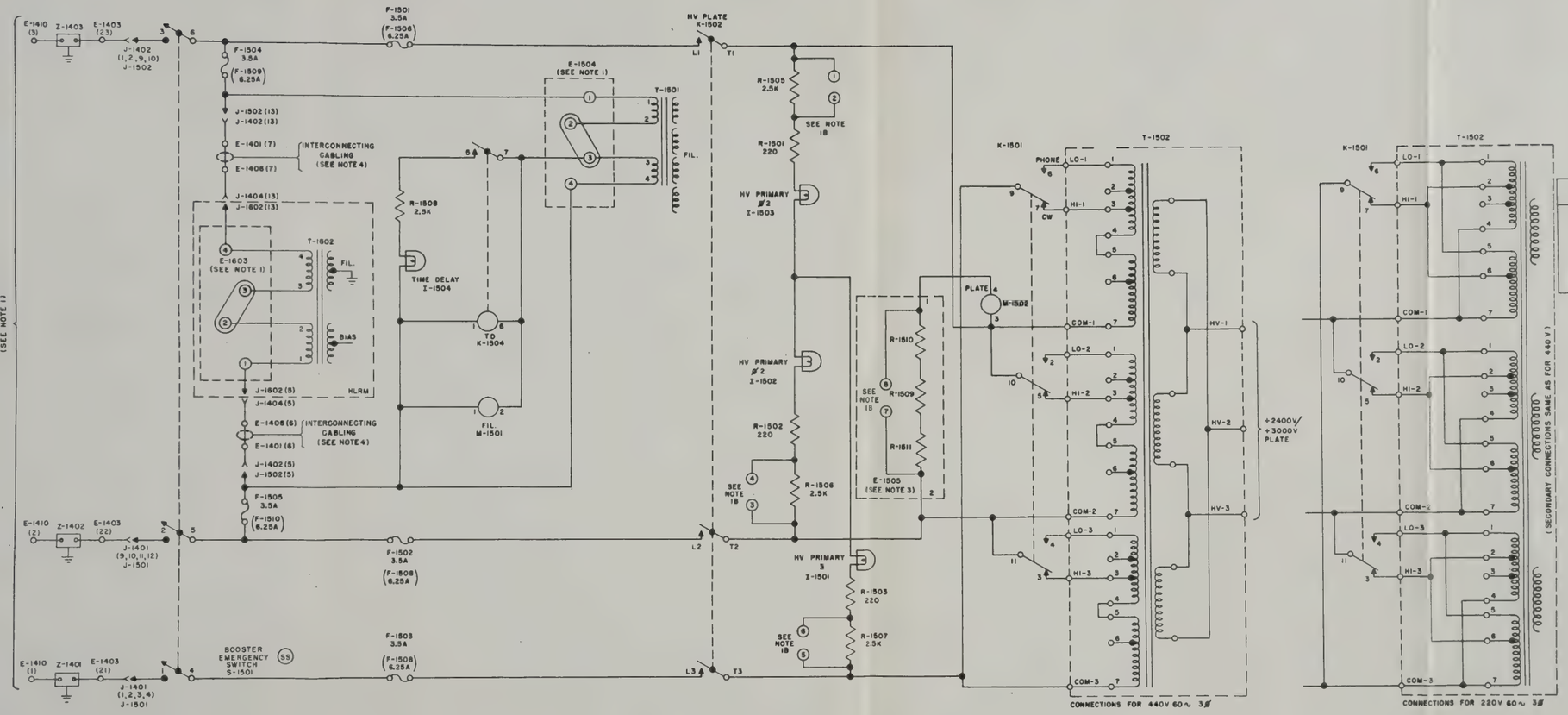

ABBREVIATION	COMMON NAME	OFFICIAL DESIGNATION	SYMBOL GROUP
HVPS	HIGH VOLTAGE POWER SUPPLY	PP-1096/SRT	1501-1599
HLRM	HIGH LEVEL RADIO MODULATOR	MD-230/SRT	1601-1699
	HVPS CABINET	CY-1573/SRT	1401-1499
	HLRM CABINET	CY-1572/SRT	1401-1499

NOTES:

1. CONNECTIONS SHOWN ARE FOR 440V 60~ 3Ø PRIMARY POWER. FOR 220V 60~ 3Ø SUPPLY, CHANGE AS FOLLOWS:
   A. SUBSTITUTE COMPONENTS IN PARENTHESES.
   B. SHORT R-1505, R-1506, R-1507, R-1509, R-1510 AND R-1511 WITH LINKS 1 THROUGH 8 ON LINK BOARD E-1503
   C. CONNECT LINK TERMINALS 1-3 AND 2-4 ON E-1504 AND E-1603
   D. CHANGE CONNECTIONS ON T-1502 AS SHOWN.
2. FUSES F-1501, F-1502, F-1503 (OR F-1508, F-1507, F-1508) ARE MOUNTED ON E-1502. FUSES F-1504, F-1505 (OR F-1509, F-1510) ARE MOUNTED ON E-1501.
3. RESISTORS R-1509, R-1510 AND R-1511 ON BOARD E-1505 ARE 3600 OHMS 2 WATTS EACH.
4. SEE INTERCONNECTING CABLING DIAGRAM FOR INTERCONNECTING DETAILS IN SECTION 3.

Figure 7-118. Primary Power Distribution Diagram, Modulator Power Supply Group and Mounting, AN/SRT-14, 15 and 16

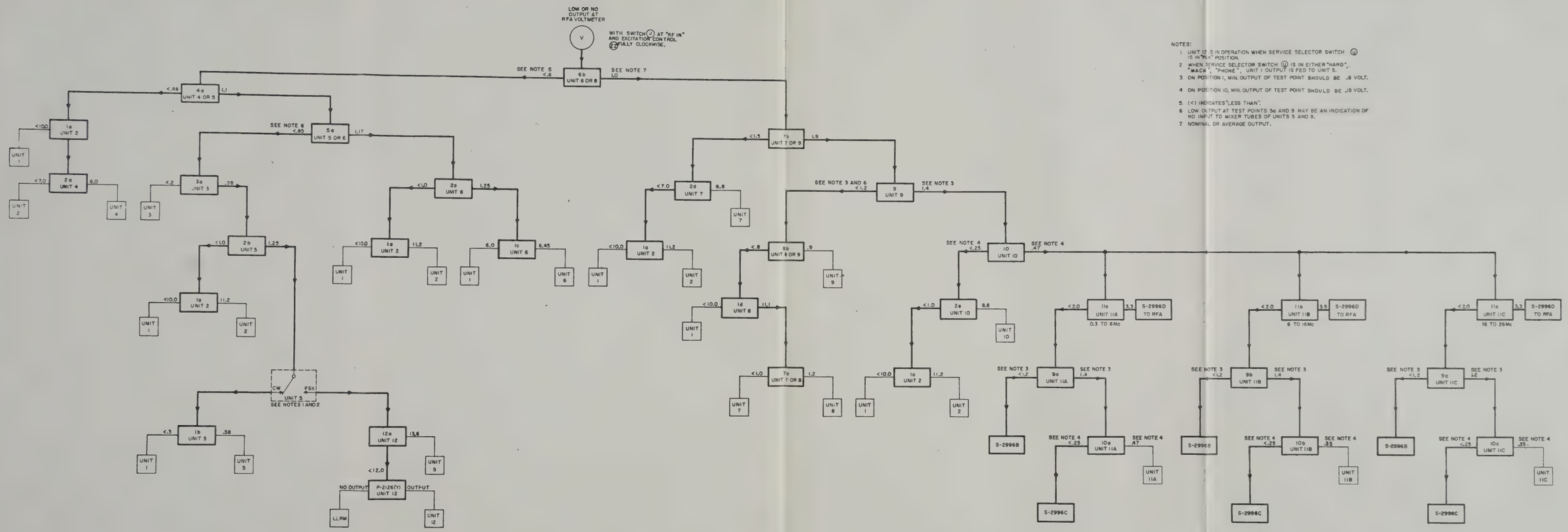

NOTES:

1. UNIT 12 IS IN OPERATION WHEN SERVICE SELECTOR SWITCH (11) IS IN "RX" POSITION.
2. WHEN SERVICE SELECTOR SWITCH (11) IS IN EITHER "HAND", "MACH", "PHONE", UNIT 1 OUTPUT IS FED TO UNIT 5.
3. ON POSITION 1, MIN. OUTPUT OF TEST POINT SHOULD BE .8 VOLT.
4. ON POSITION 10, MIN. OUTPUT OF TEST POINT SHOULD BE .15 VOLT.
5. (<) INDICATES "LESS THAN".
6. LOW OUTPUT AT TEST POINTS 5a AND 9 MAY BE AN INDICATION OF NO INPUT TO MIXER TUBES OF UNITS 5 AND 9.
7. NOMINAL OR AVERAGE OUTPUT.

Figure 7—120. Radio Frequency Oscillator O-275/SRT (RFO), Simplified Trouble Location, Block Diagram

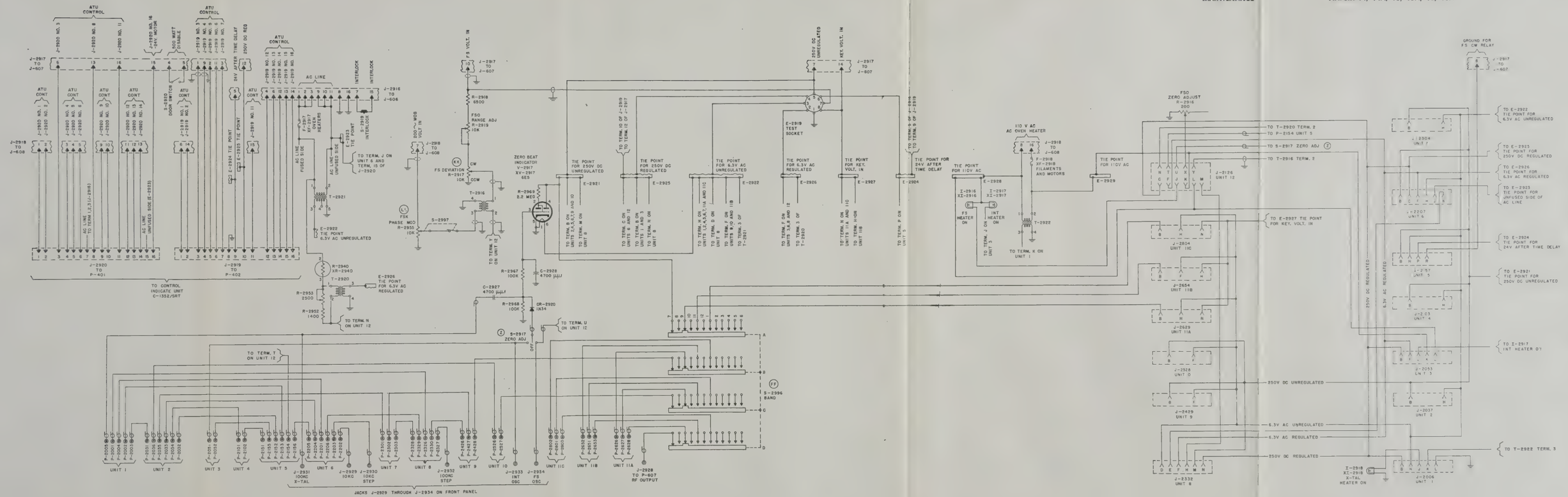

Figure 7–121. RFO, Unit 14 (Z-29011), Schematic Diagram

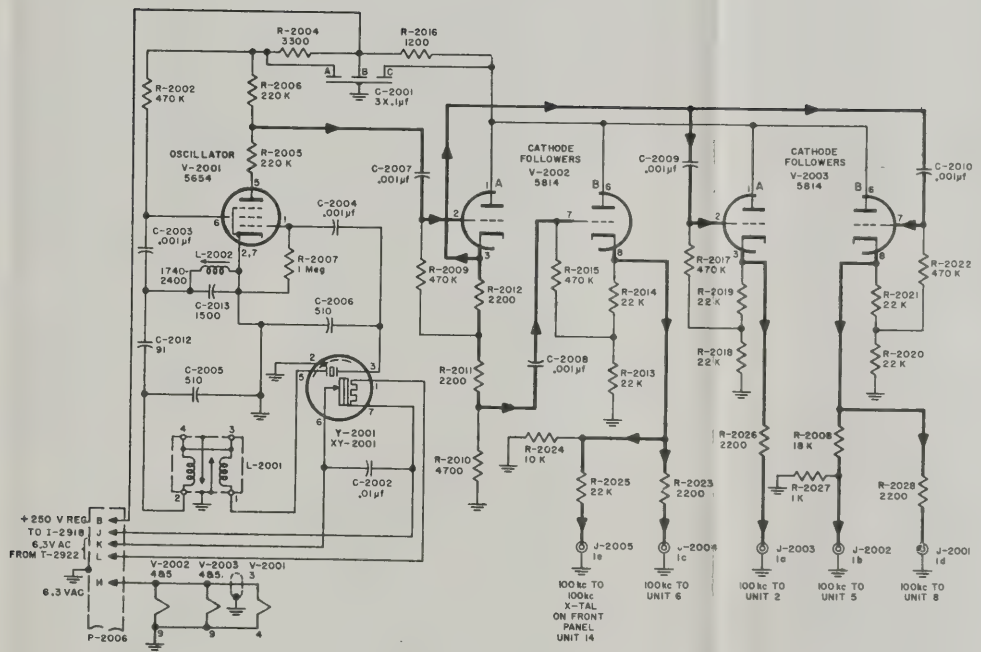

NOTE:
ALL RESISTANCES IN OHMS, CAPACITANCES IN MICRO-MICROFARADS, INDUCTANCES IN MICROHENRIES, UNLESS OTHERWISE SPECIFIED.

Figure 7—123. RFO, Unit 1 (Z-2001), Schematic Diagram

ORIGINAL

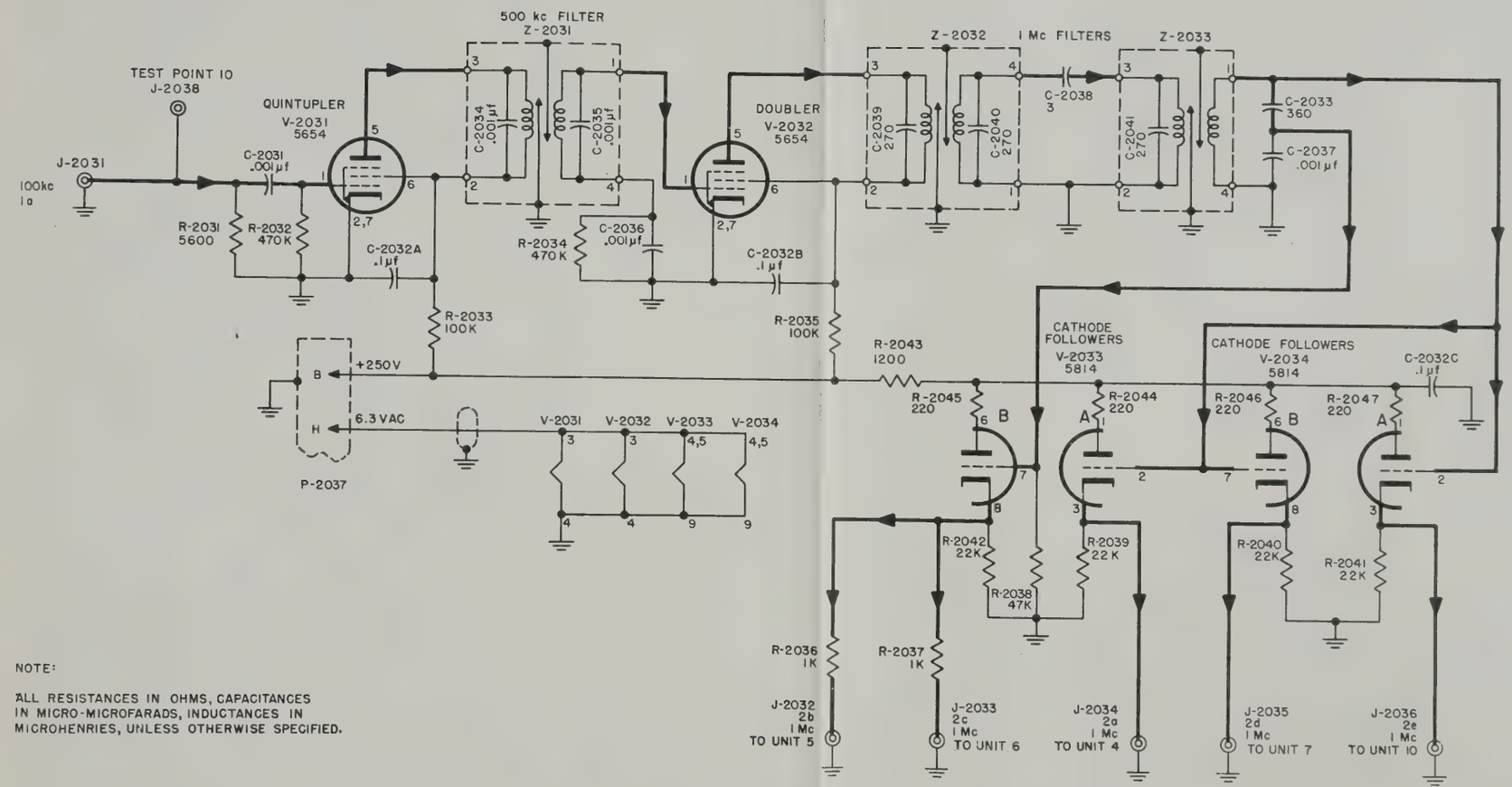

NOTE:

ALL RESISTANCES IN OHMS, CAPACITANCES IN MICRO-MICROFARADS, INDUCTANCES IN MICROHENRIES, UNLESS OTHERWISE SPECIFIED.

Figure 7–125. RFO, Unit 2 (Z-2034), Schematic Diagram

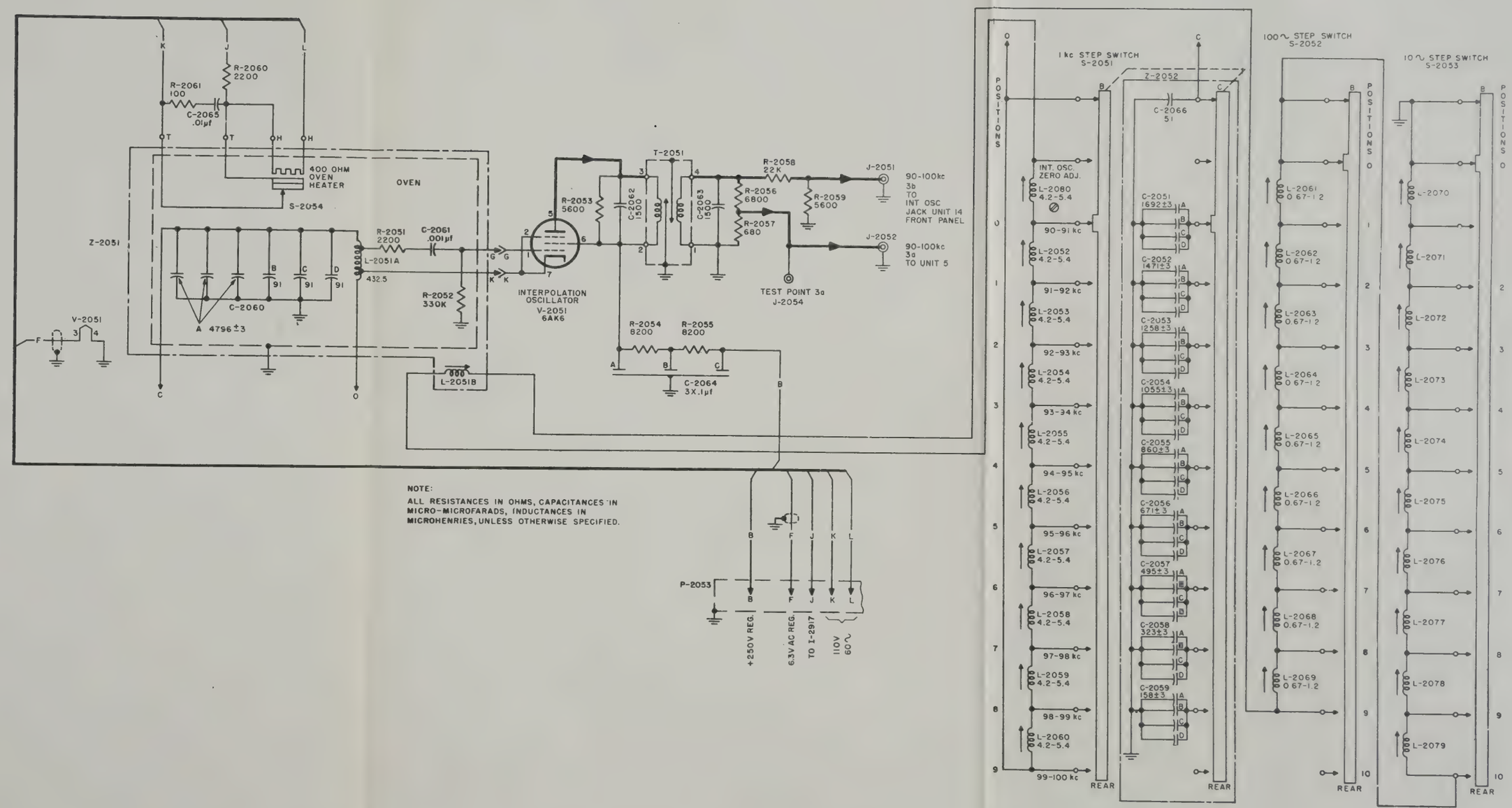

Figure 7—127. RFO, Unit 3 (Z-2053), Schematic Diagram

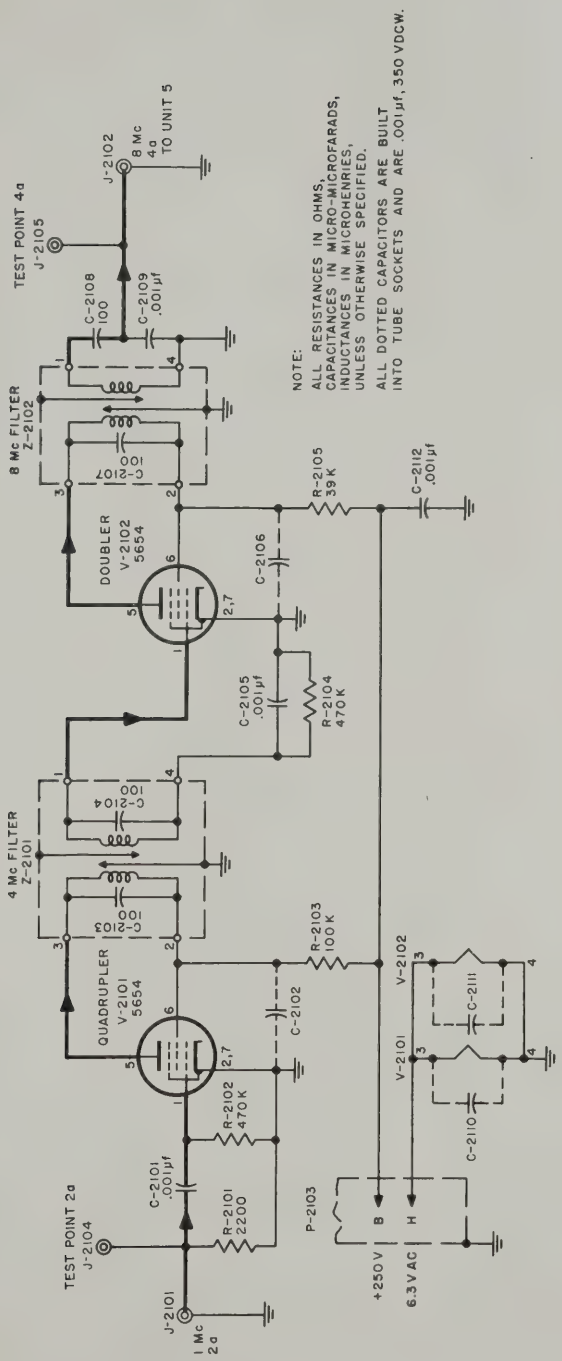

Figure 7—129. RFO, Unit 4 (Z-2103), Schematic Diagram

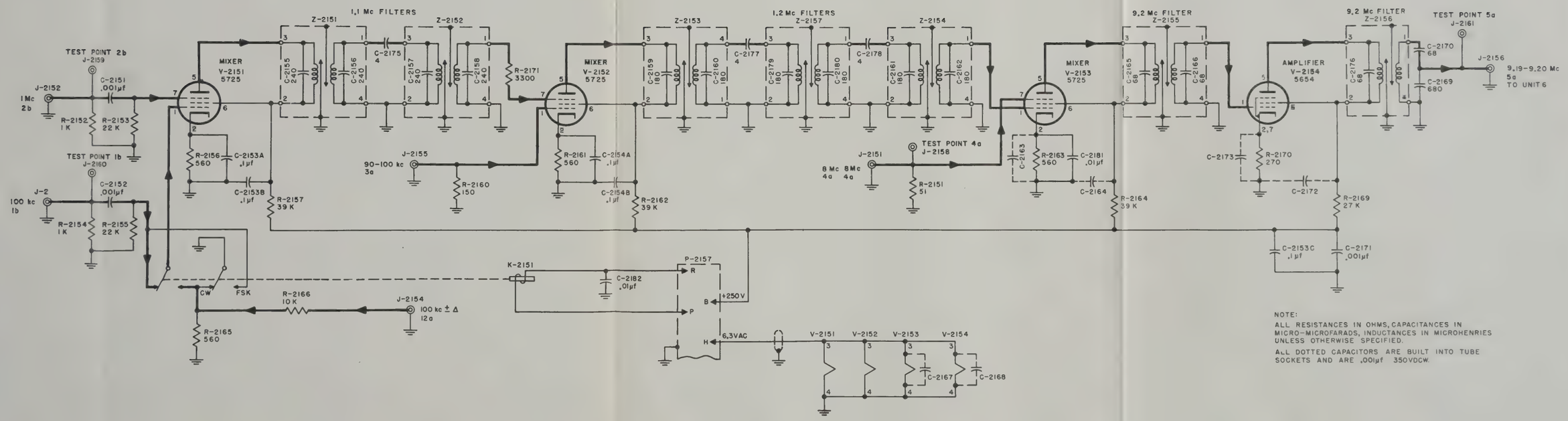

NOTE:
ALL RESISTANCES IN OHMS, CAPACITANCES IN MICRO-MICROFARADS, INDUCTANCES IN MICROHENRIES UNLESS OTHERWISE SPECIFIED.

ALL DOTTED CAPACITORS ARE BUILT INTO TUBE SOCKETS AND ARE .001µf 350VDCW.

Figure 7-131. RFO, Unit 5 (Z-2158), Schematic Diagram

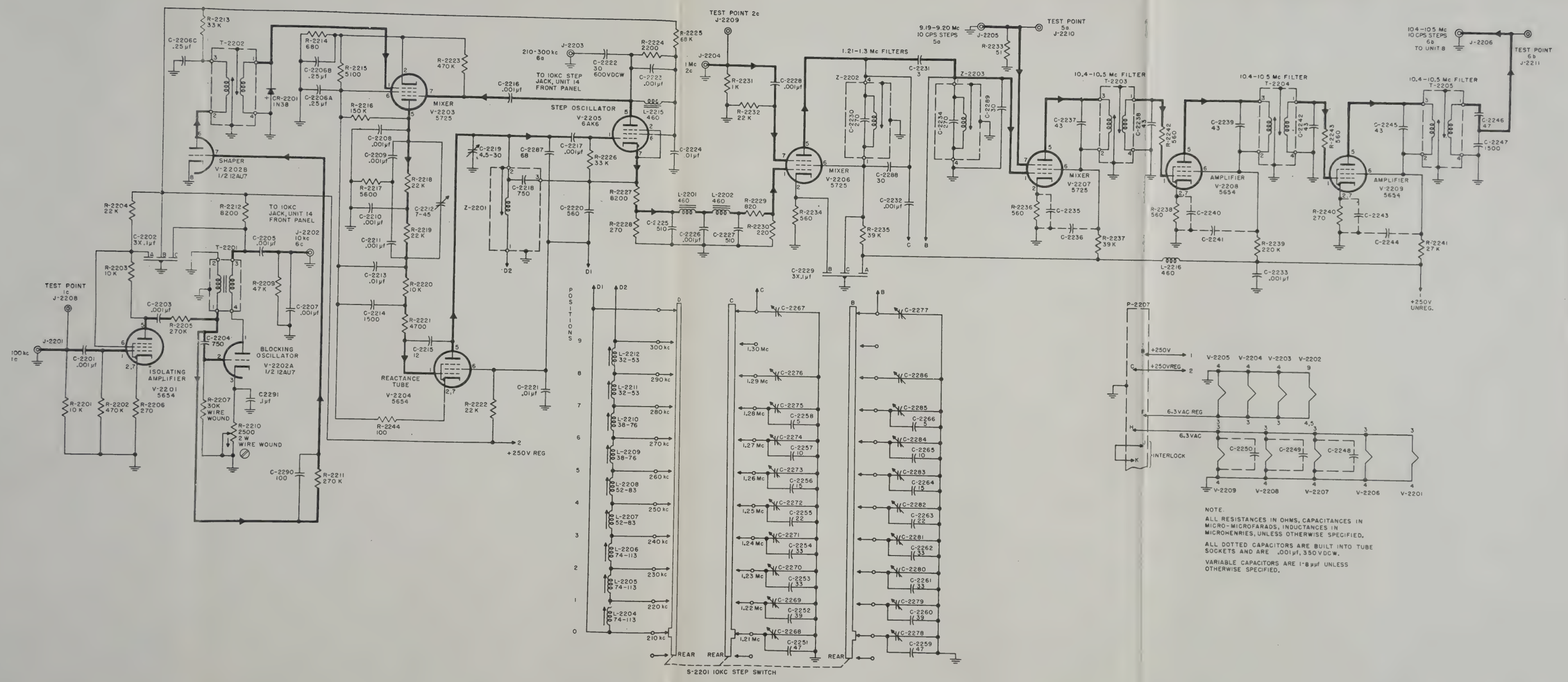

NOTE.

ALL RESISTANCES IN OHMS, CAPACITANCES IN MICRO-MICROFARADS, INDUCTANCES IN MICROHENRIES, UNLESS OTHERWISE SPECIFIED.

ALL DOTTED CAPACITORS ARE BUILT INTO TUBE SOCKETS AND ARE .001µf, 350 VDCW.

VARIABLE CAPACITORS ARE 1-8 µµf UNLESS OTHERWISE SPECIFIED.

Figure 7–133. RFO, Unit 6 (Z-2204), Schematic Diagram

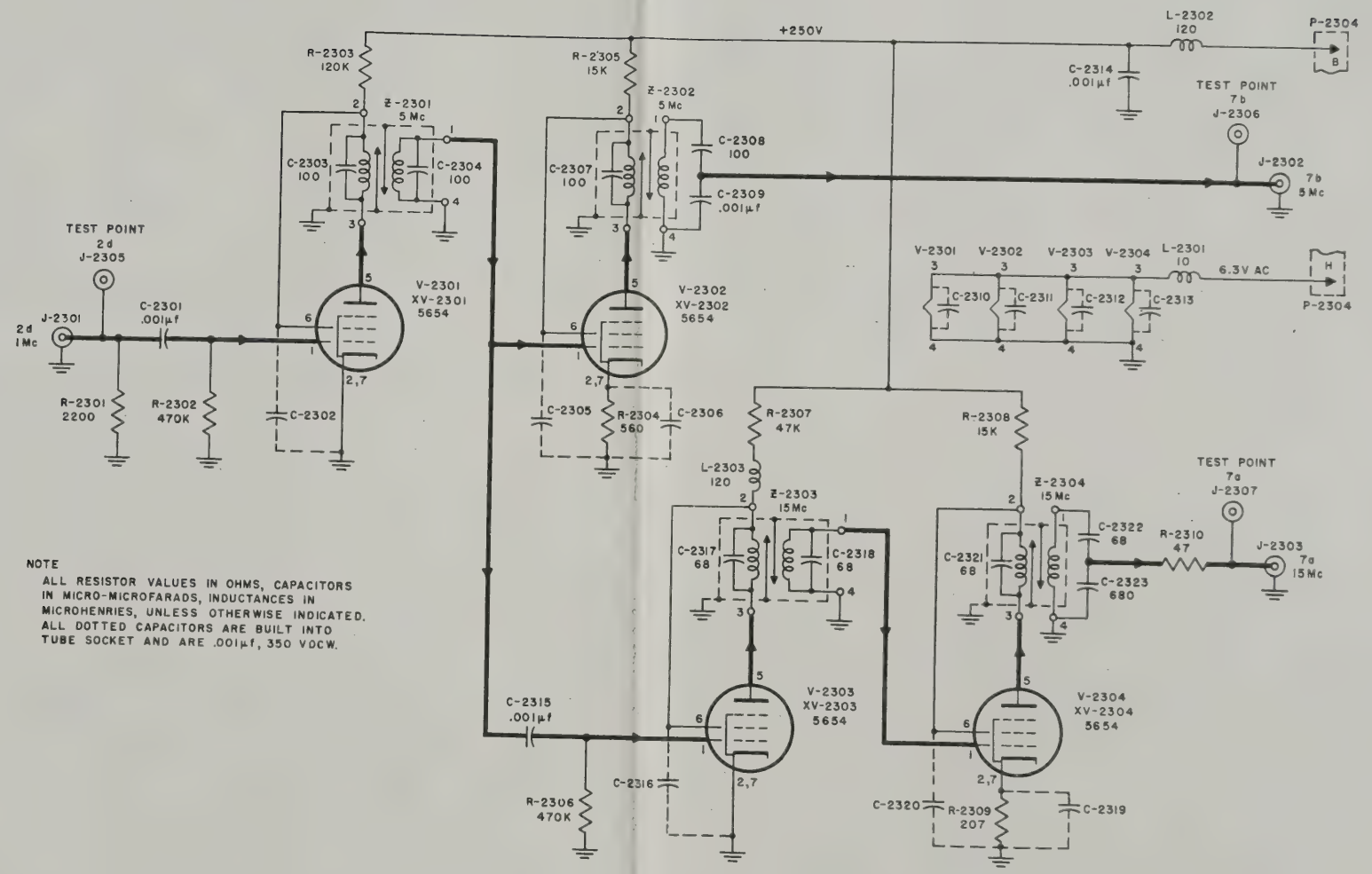

NOTE
ALL RESISTOR VALUES IN OHMS, CAPACITORS IN MICRO-MICROFARADS, INDUCTANCES IN MICROHENRIES, UNLESS OTHERWISE INDICATED. ALL DOTTED CAPACITORS ARE BUILT INTO TUBE SOCKET AND ARE .001µf, 350 VDCW.

Figure 7–135. RFO, Unit 7 (Z-2305), Schematic Diagram

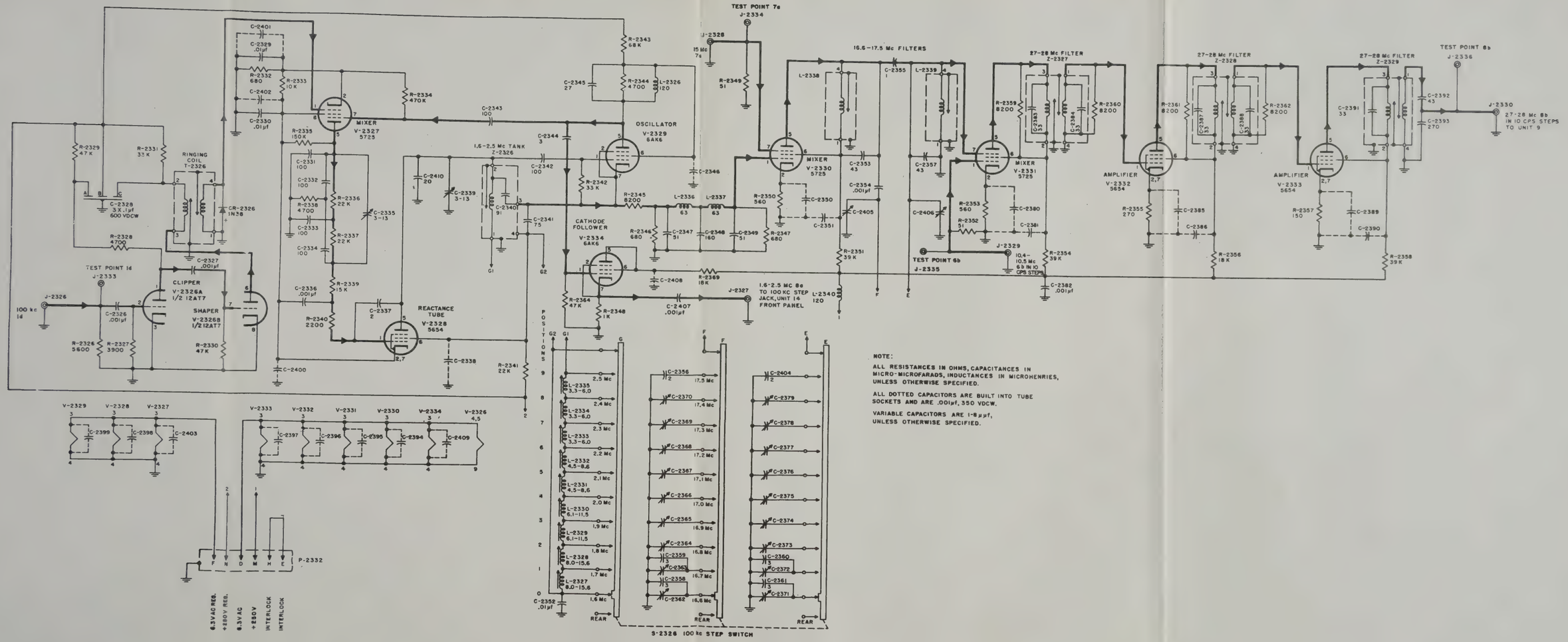

NOTE:

ALL RESISTANCES IN OHMS, CAPACITANCES IN MICRO-MICROFARADS, INDUCTANCES IN MICROHENRIES, UNLESS OTHERWISE SPECIFIED.

ALL DOTTED CAPACITORS ARE BUILT INTO TUBE SOCKETS AND ARE .001µf, 350 VDCW.

VARIABLE CAPACITORS ARE 1-8µµf, UNLESS OTHERWISE SPECIFIED.

Figure 7—137. RFO, Unit 8 (Z-2330), Schematic Diagram

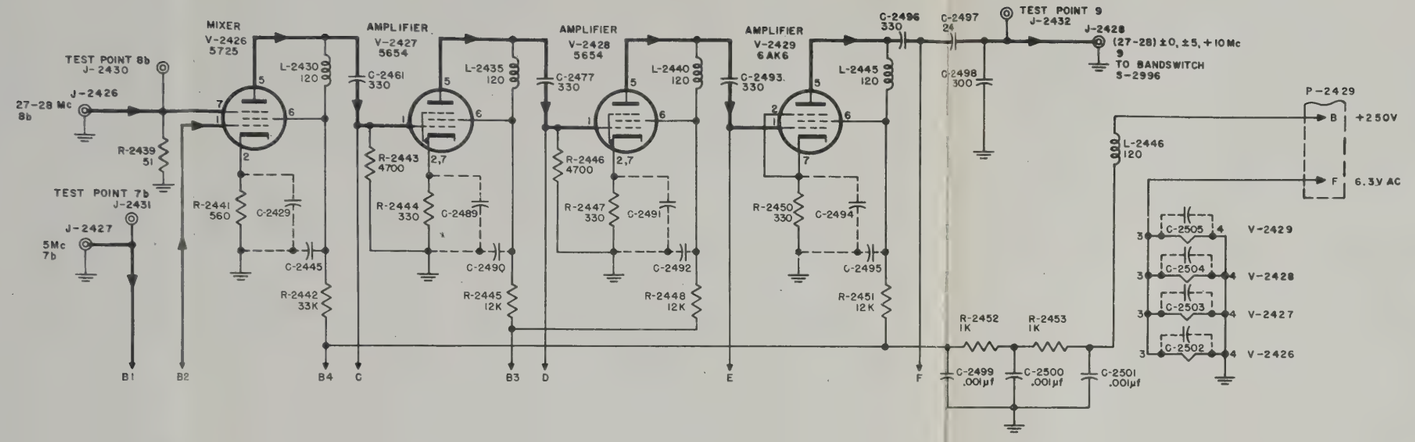

NOTE:

ALL RESISTANCES IN OHMS, ALL CAPACITANCES IN MICRO-MICROFARADS, ALL INDUCTANCES IN MICROHENRIES UNLESS OTHERWISE SPECIFIED.

ALL DOTTED CAPACITORS ARE BUILT INTO TUBE SOCKETS AND ARE .001μf, 350 VDCW.

VARIABLE CAPACITORS ARE IN 1-7μμf UNLESS OTHERWISE SPECIFIED.

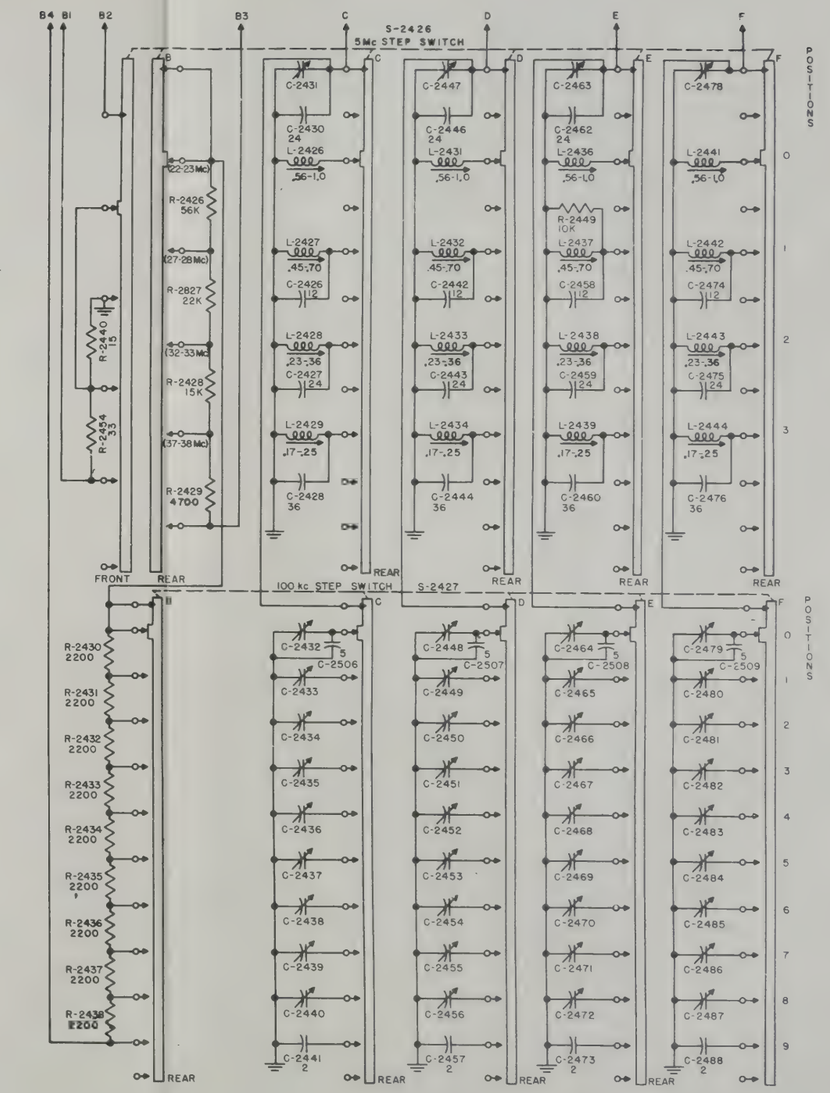

Figure 7—139. RFO, Unit 9 (Z-2426), Schematic Diagram

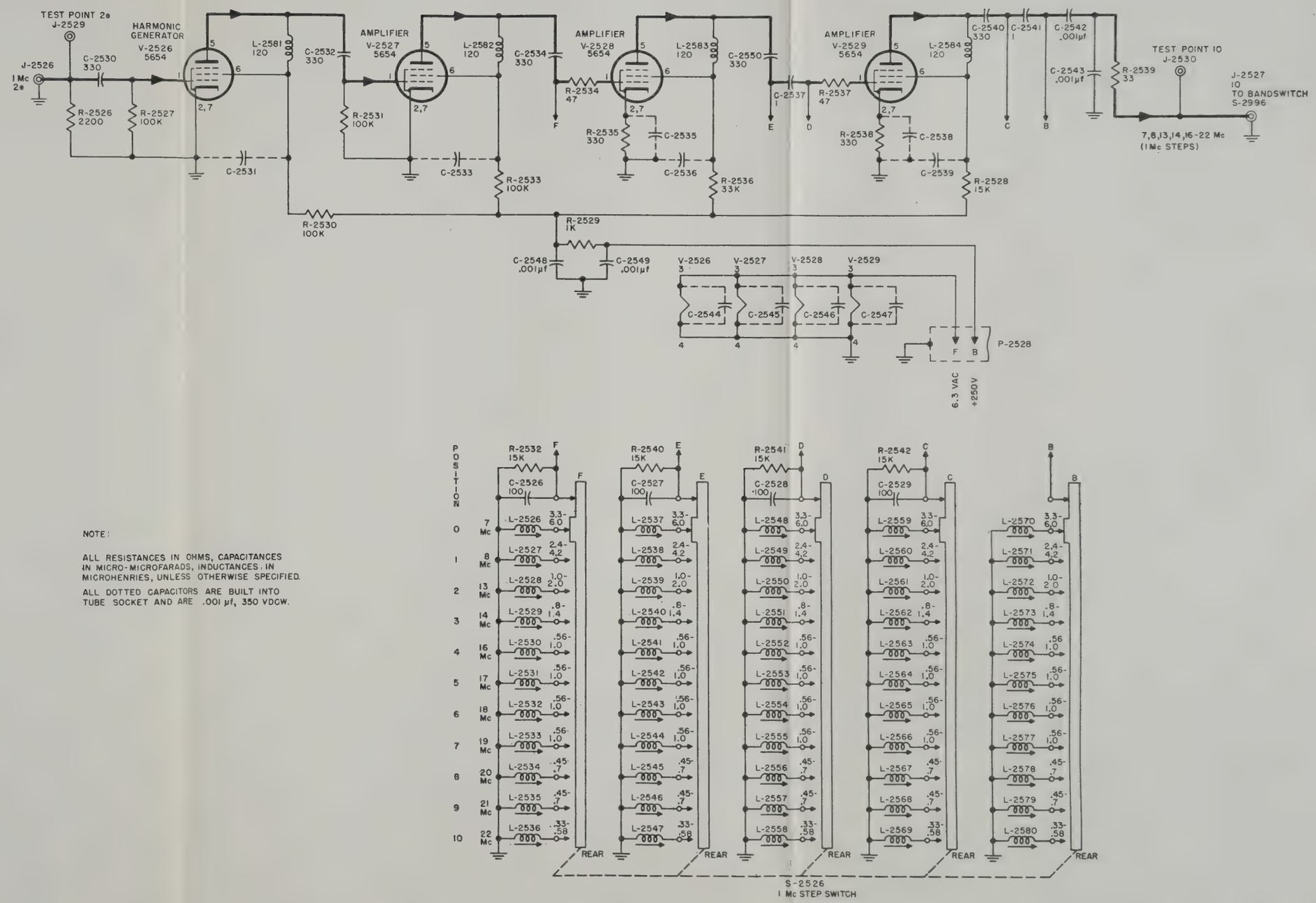

NOTE:

ALL RESISTANCES IN OHMS, CAPACITANCES IN MICRO-MICROFARADS, INDUCTANCES IN MICROHENRIES, UNLESS OTHERWISE SPECIFIED.

ALL DOTTED CAPACITORS ARE BUILT INTO TUBE SOCKET AND ARE .001 µf, 350 VDCW.

Figure 7—141. RFO, Unit 10 (Z-2526), Schematic Diagram

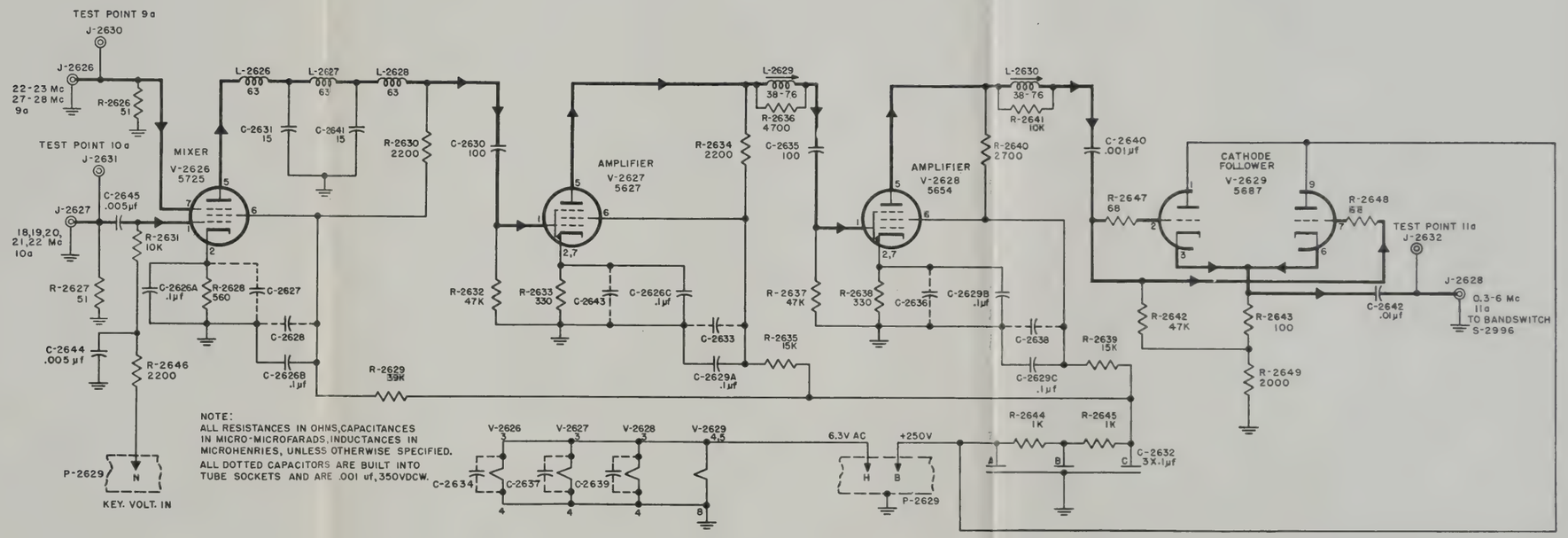

Figure 7–143. RFO, Unit 11A (Z-2626), Schematic Diagram

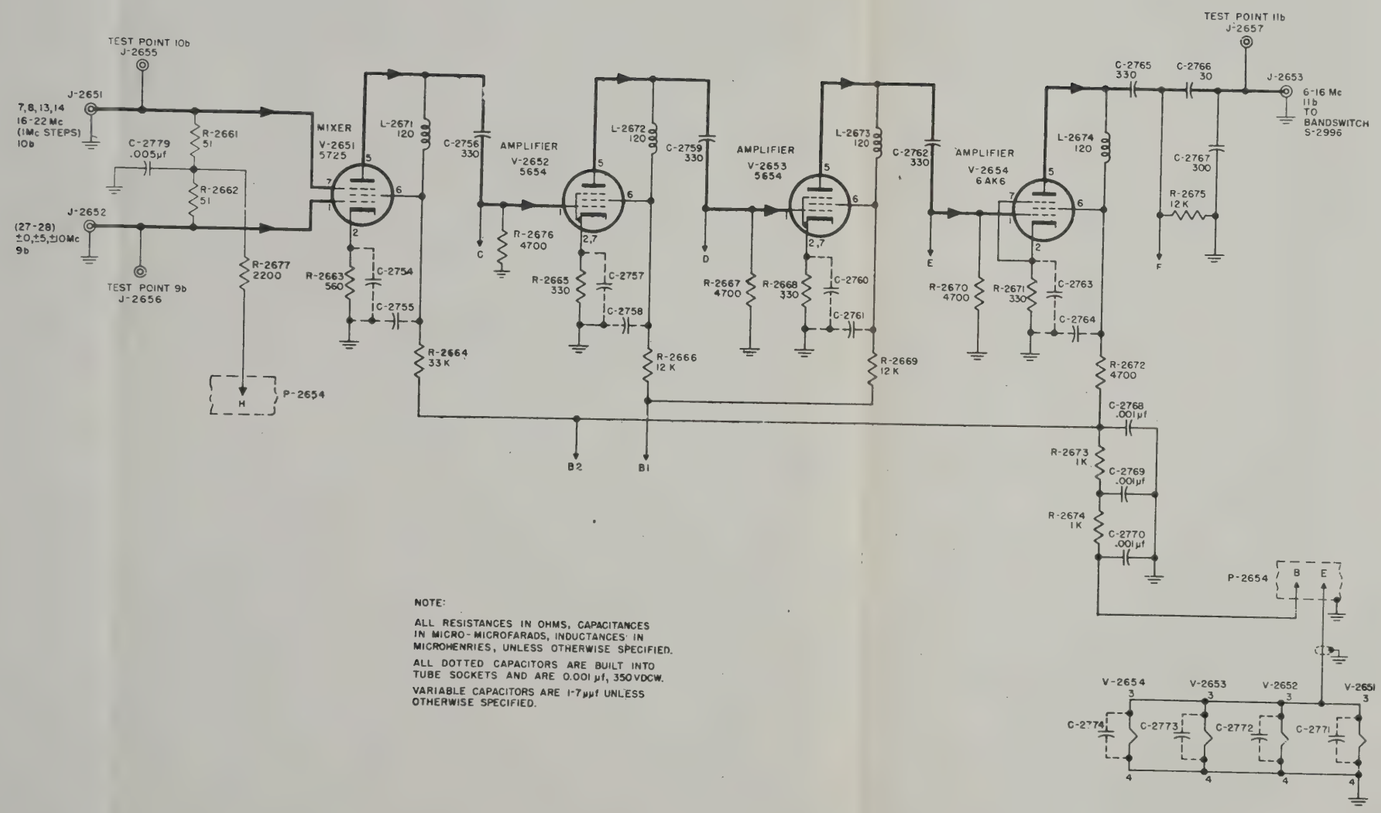

NOTE:

ALL RESISTANCES IN OHMS, CAPACITANCES IN MICRO-MICROFARADS, INDUCTANCES IN MICROHENRIES, UNLESS OTHERWISE SPECIFIED.

ALL DOTTED CAPACITORS ARE BUILT INTO TUBE SOCKETS AND ARE 0.001 µf, 350 VDCW.

VARIABLE CAPACITORS ARE 1-7µµf UNLESS OTHERWISE SPECIFIED.

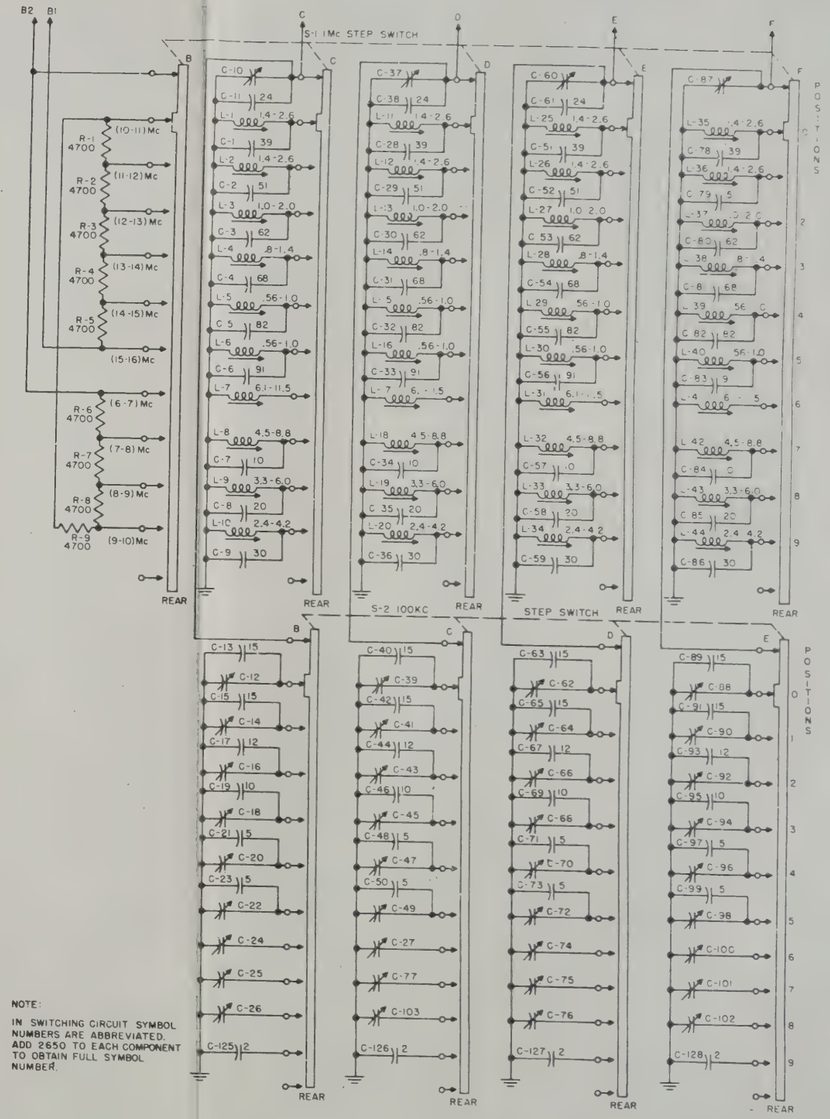

NOTE:

IN SWITCHING CIRCUIT SYMBOL NUMBERS ARE ABBREVIATED. ADD 2650 TO EACH COMPONENT TO OBTAIN FULL SYMBOL NUMBER.

Figure 7—145. RFO, Unit 11B (Z-2651), Schematic Diagram

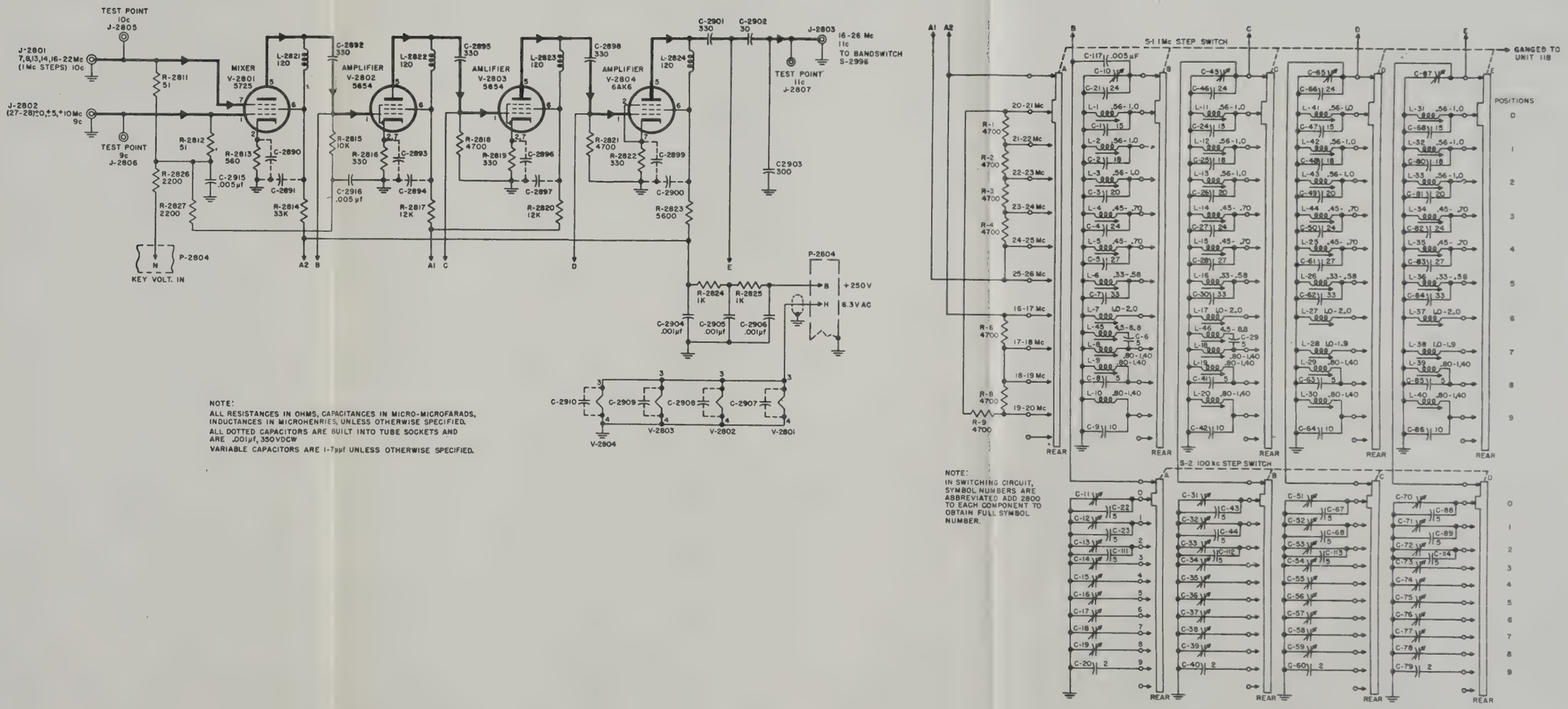

NOTE:
ALL RESISTANCES IN OHMS, CAPACITANCES IN MICRO-MICROFARADS, INDUCTANCES IN MICROHENRIES, UNLESS OTHERWISE SPECIFIED.
ALL DOTTED CAPACITORS ARE BUILT INTO TUBE SOCKETS AND ARE .001μf, 350VDCW
VARIABLE CAPACITORS ARE 1-7μμf UNLESS OTHERWISE SPECIFIED.

NOTE:
IN SWITCHING CIRCUIT, SYMBOL NUMBERS ARE ABBREVIATED. ADD 2800 TO EACH COMPONENT TO OBTAIN FULL SYMBOL NUMBER.

Figure 7–147. RFO, Unit 11C (Z-2801), Schematic Diagram

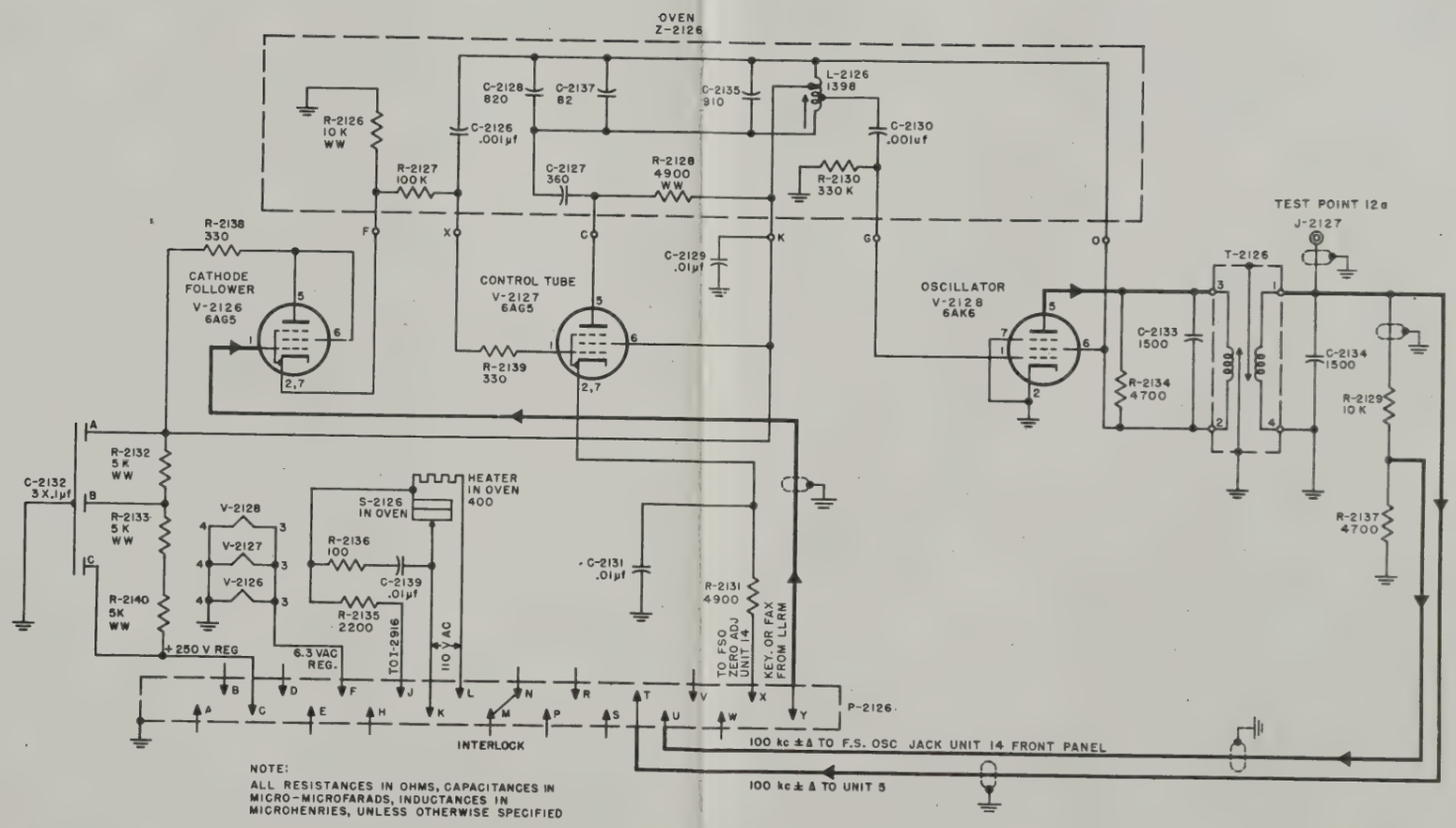

NOTE:
ALL RESISTANCES IN OHMS, CAPACITANCES IN MICRO-MICROFARADS, INDUCTANCES IN MICROHENRIES, UNLESS OTHERWISE SPECIFIED

Figure 7–149. RFO, Unit 12 (Z-2127), Schematic Diagram

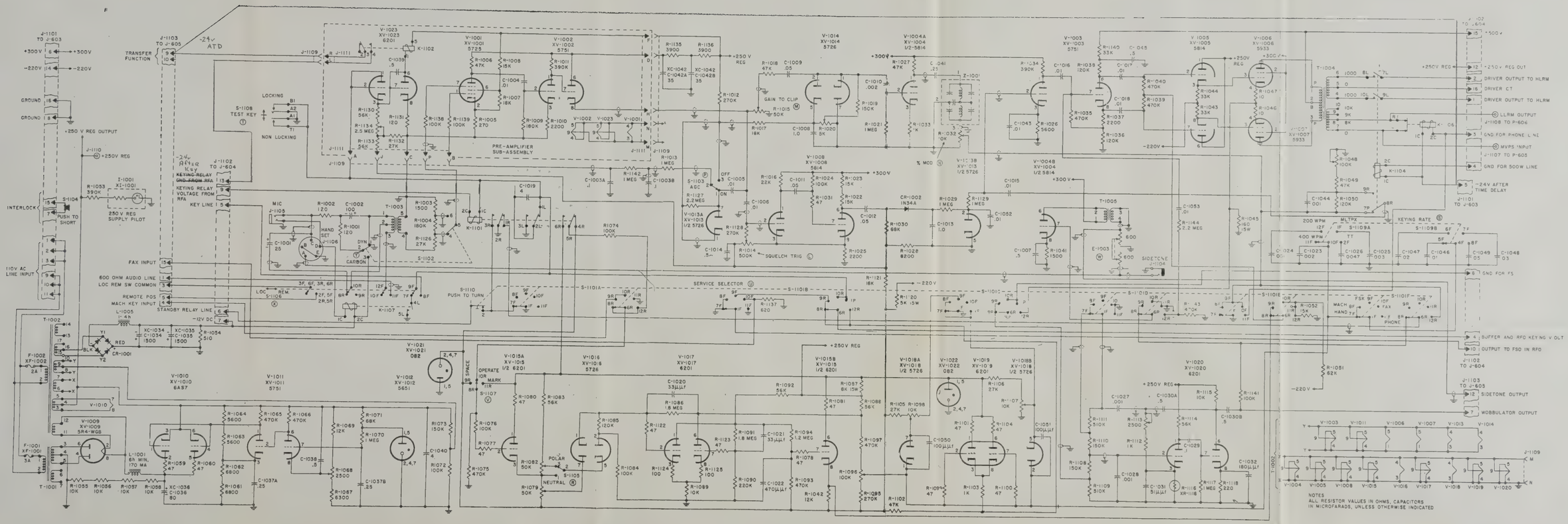

Figure 7-153. Radio Modulator MD-229/SRT (LLRM), Schematic Diagram

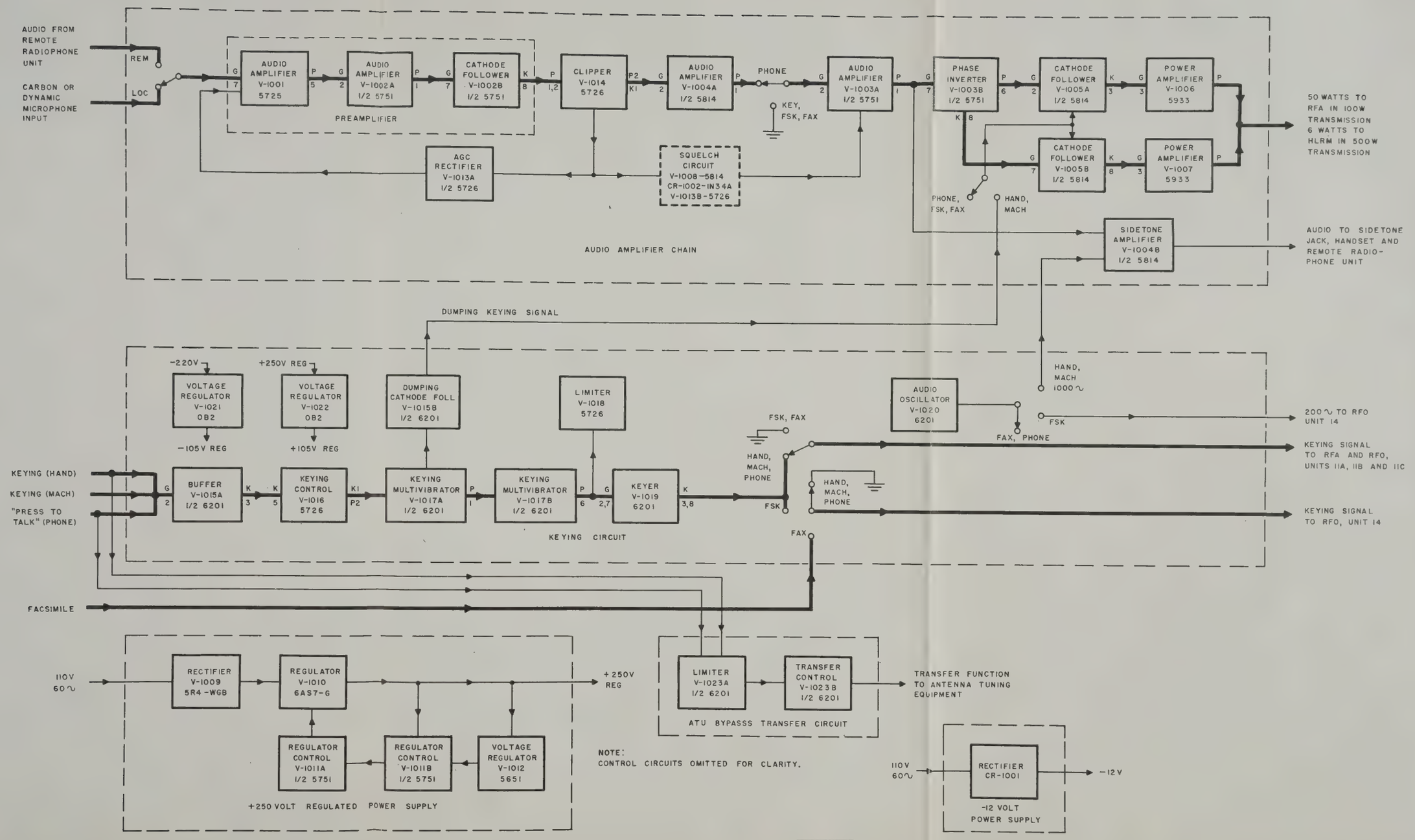

Figure 7-155. Radio Modulator MD-229/SRT (LLRM), Servicing Block Diagram

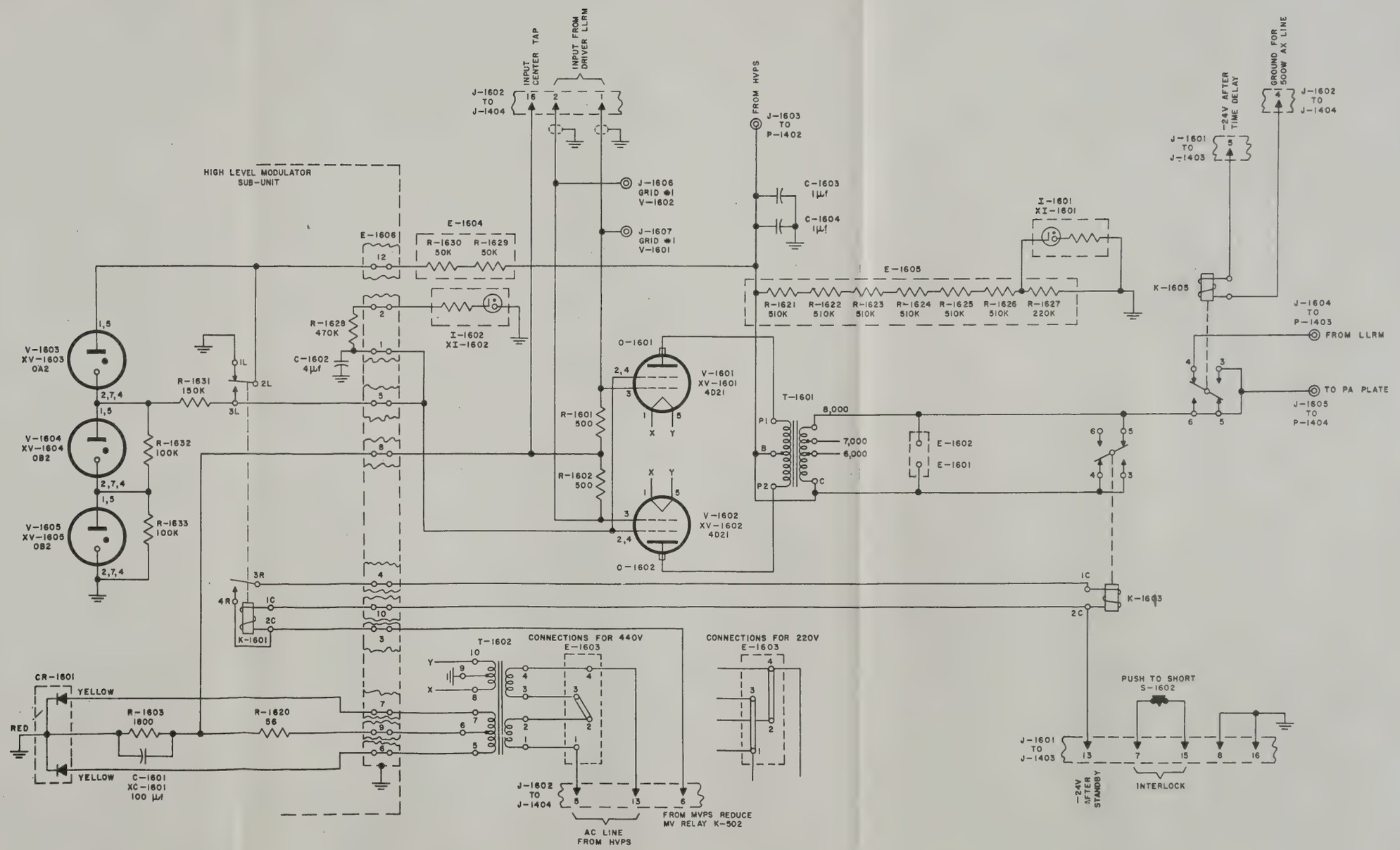

Figure 7-156. Radio Modulator MD-230/SRT (HLRM), Schematic Diagram

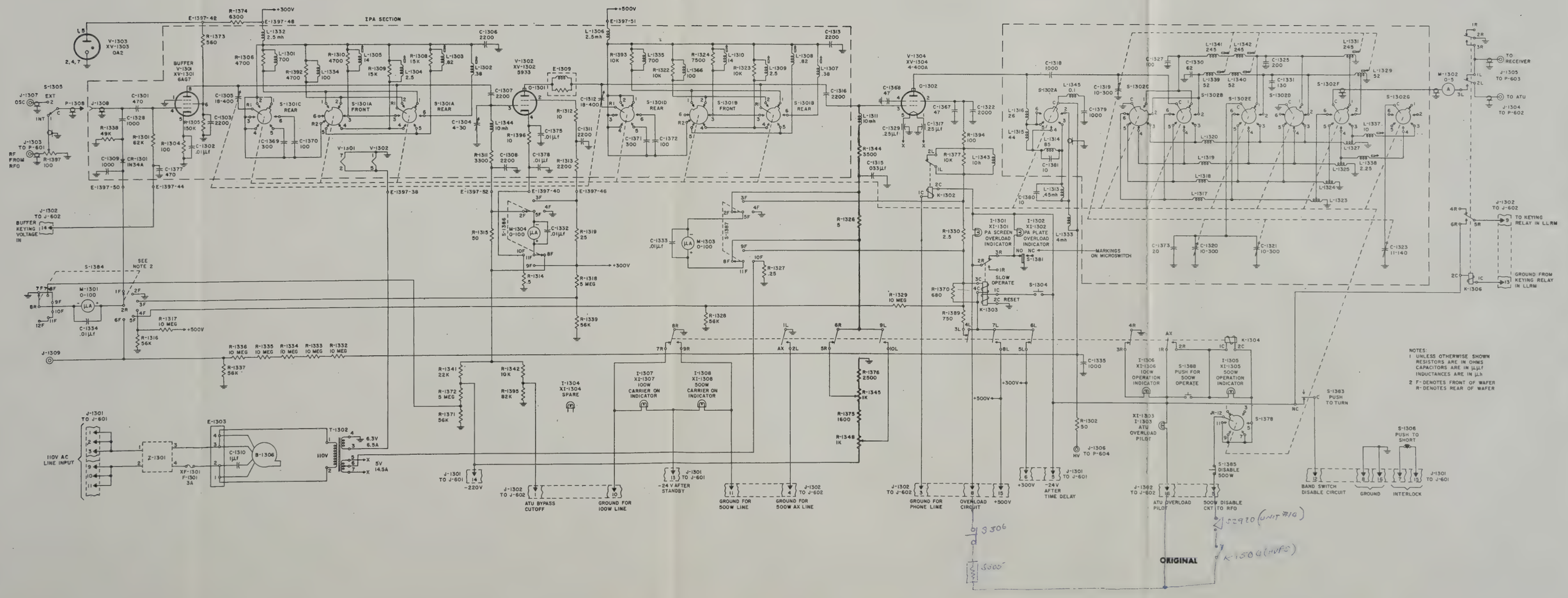

Figure 7-158. Radio Frequency Amplifier AM-1008/SRT (RDA), Schematic Diagram

ORIGINAL

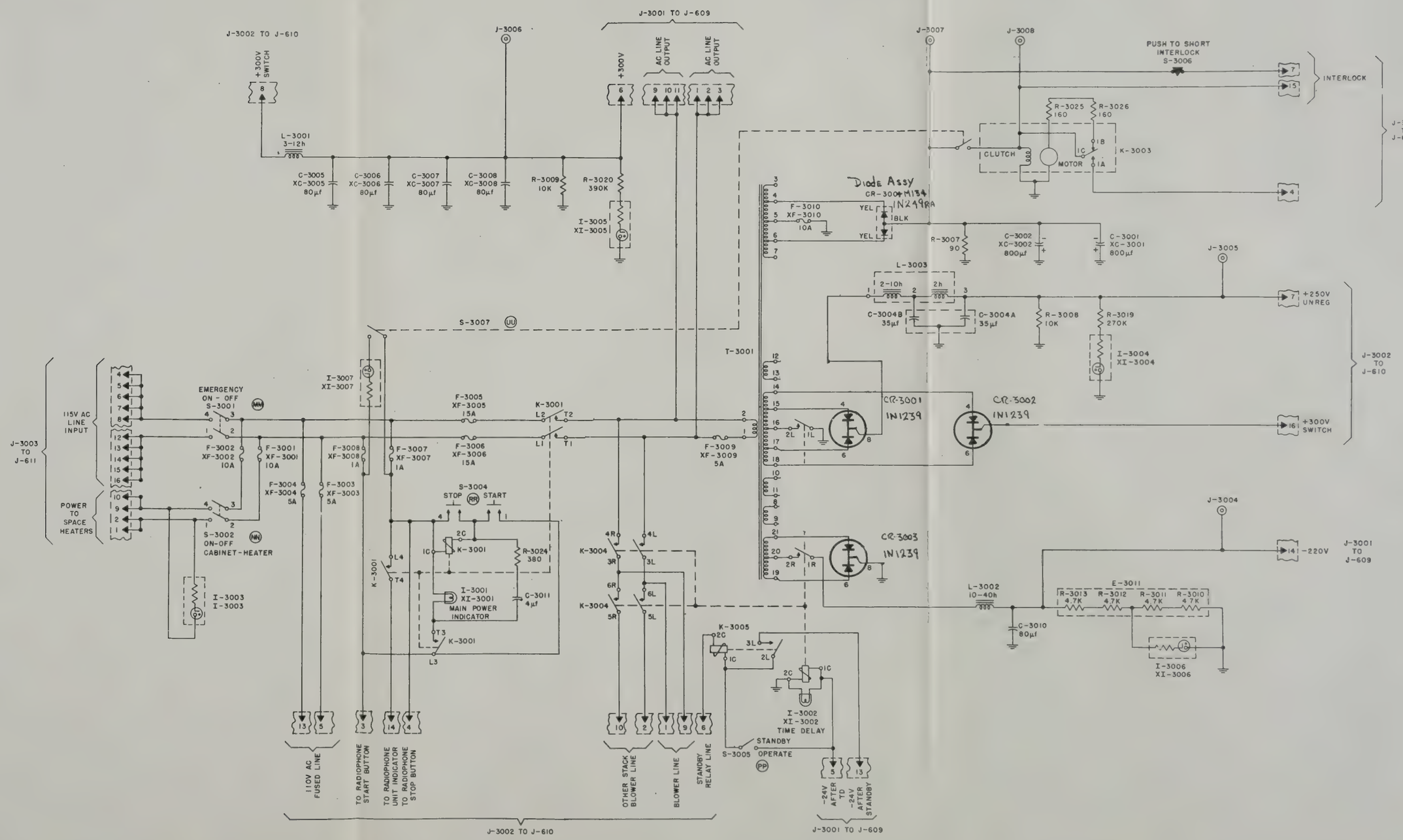

Figure 7—160. Power Supply PP—1094/SRT (LVPS), Schematic Diagram

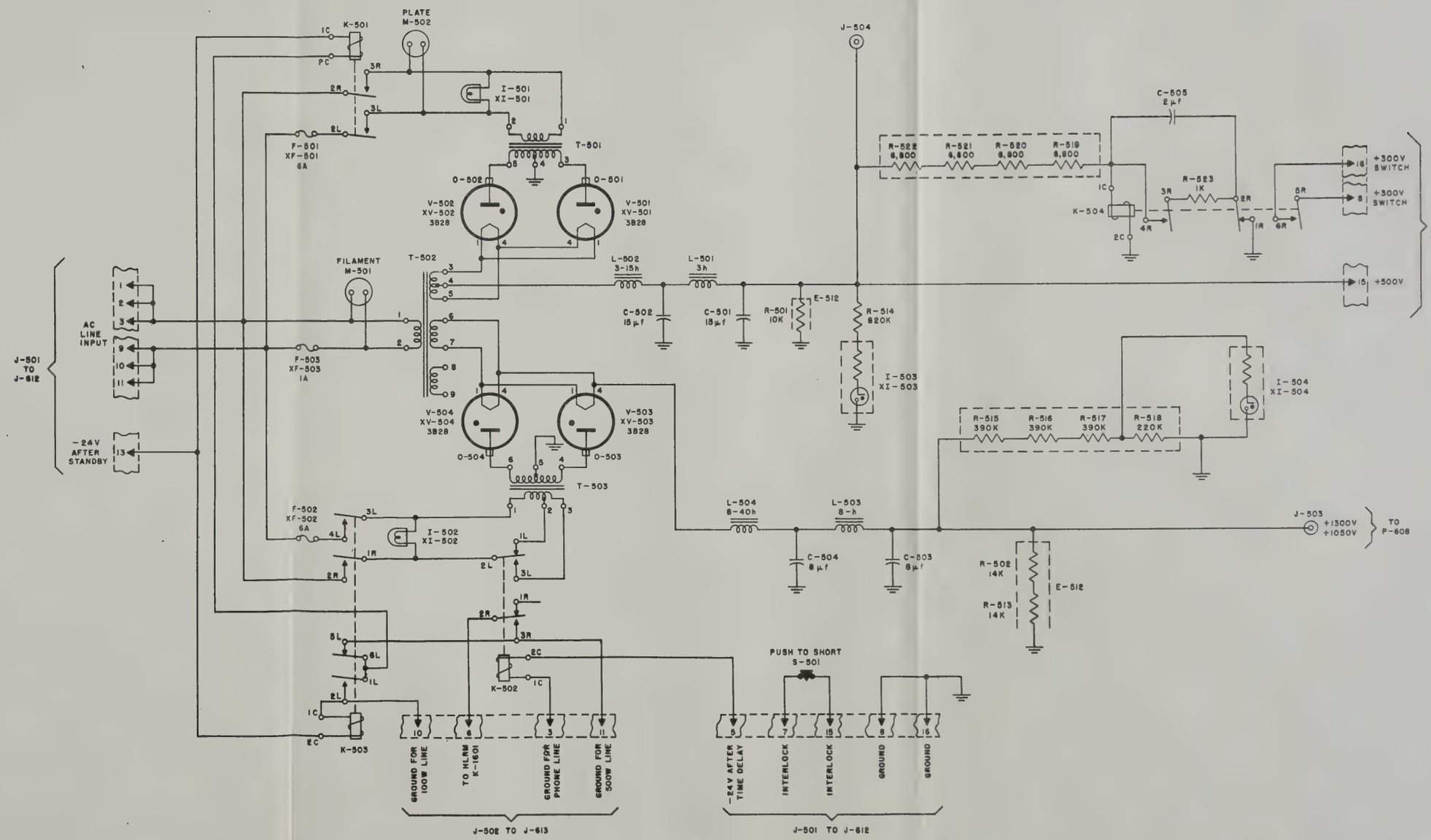

Figure 7-162. Power Supply PP-1095/SRT (MVPS), Schematic Diagram

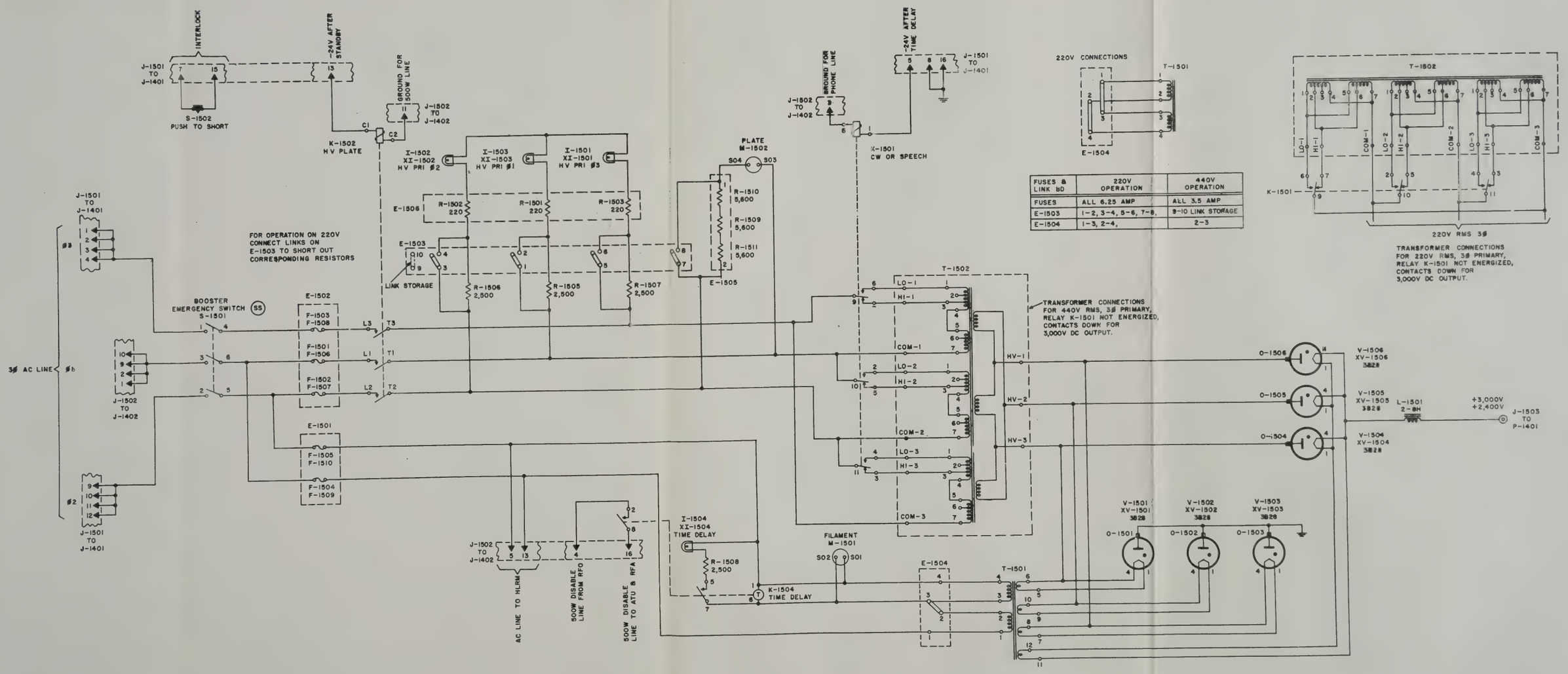

FUSES & LINK BD	220V OPERATION	440V OPERATION
FUSES	ALL 6.25 AMP	ALL 3.5 AMP
E-1503	1-2, 3-4, 5-6, 7-8,	9-10 LINK STORAGE
E-1504	1-3, 2-4,	2-3

Figure 7-164. Power Supply PP-1896/SRT (HVPS), Schematic Diagram

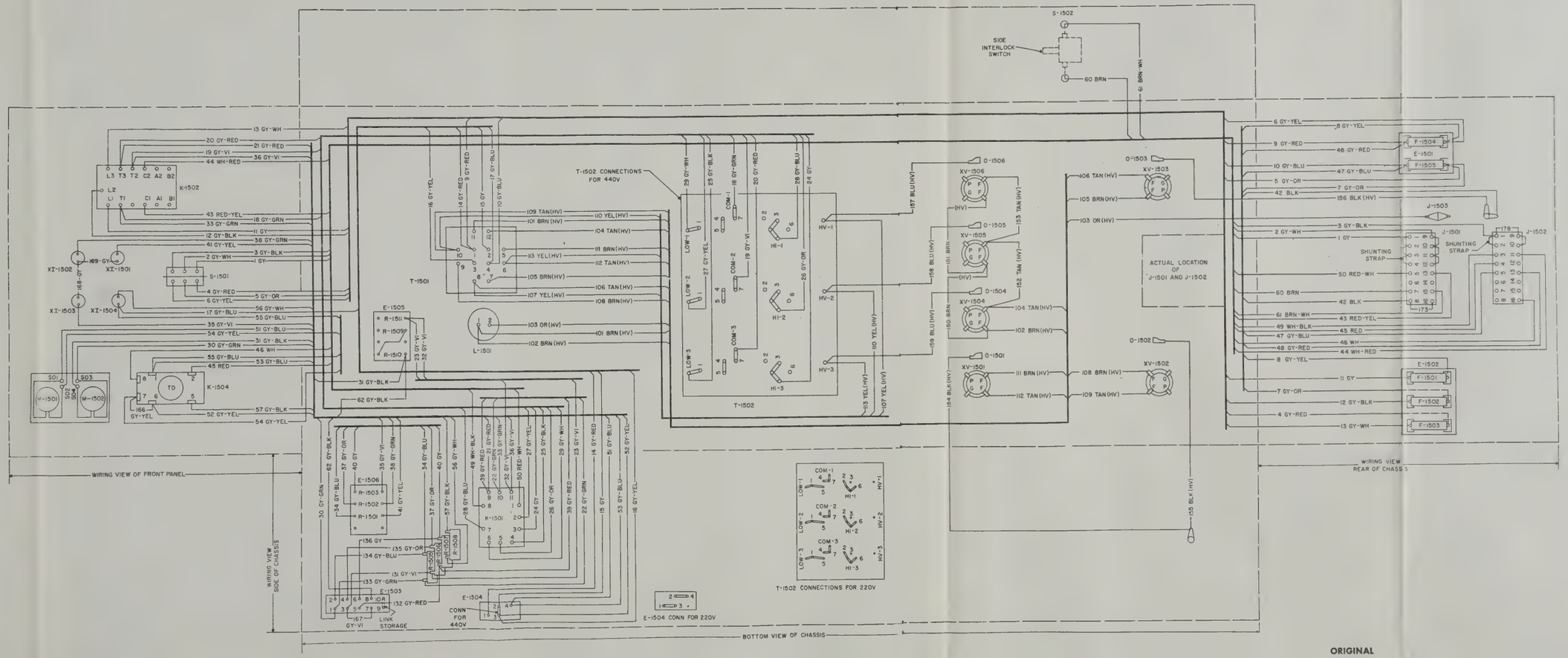

WIRE NO.	DESCRIPTION
1-8, 11-13, 18-21, 24-29, 33, 36, 42	NO. 16 AWG STRANDED SINGLE CONDUCTOR, 1000V INSULATION
60, 61	NO. 18 AWG STRANDED SINGLE CONDUCTOR, 1000V INSULATION
9, 10, 14-17, 22, 23, 30-32, 34, 35, 37-41, 43-57, 62, 131-136, 166-169	NO. 20 AWG STRANDED SINGLE CONDUCTOR, 5000V INSULATION
101, 102, 104, 150-153	NO. 14 AWG STRANDED SINGLE CONDUCTOR, 5000V INSULATION
103, 105-113, 157-159	NO. 16 AWG STRANDED SINGLE CONDUCTOR, 5000V INSULATION
154-156	NO. 20 AWG STRANDED SINGLE CONDUCTOR, 5000V INSULATION
173, 178	NO. 18 AWG SOLID BARE COPPER TINNED

Figure 7-165. Power Supply PP-1096/SRT (HVPS), Wiring Diagram

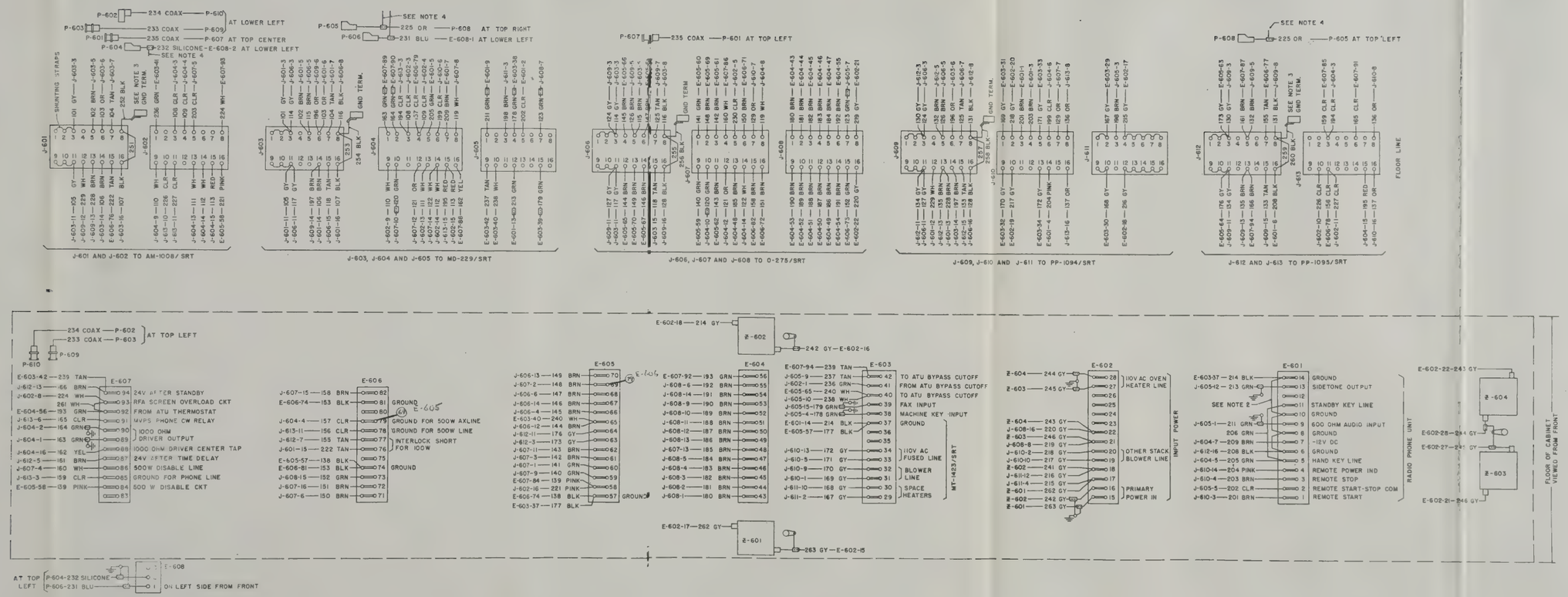

WIRE NO	DESCRIPTION
130, 134, 215, 216, 241, 262	NO.14 AWG STRANDED SINGLE CONDUCTOR, 2500V INSULATION
107, 116, 128, 131, 138, 153, 167, 168, 177, 208, 214	NO. 16 AWG STRANDED SINGLE CONDUCTOR, 2500V INSULATION
101, 104, 105, 114, 117, 118, 124, 125, 127, 133, 144, 145, 155, 158, 171-173, 176, 198, 201-204, 222, 223, 237-240, 252, 254, 256, 258, 260	NO.18 AWG STRANDED SINGLE CONDUCTOR, 2500V INSULATION
102, 106, 115, 126, 132, 135, 143, 146, 147, 149-151, 161, 166, 169, 170, 180-193, 217-220, 228, 243, 246, 261	NO. 20 AWG STRANDED SINGLE CONDUCTOR, 2500V INSULATION
103, 108-113, 119, 121, 122, 129, 136, 137, 139-142, 148, 152, 156, 157, 159, 160, 162, 165, 194-197, 199, 205, 206, 209, 221, 224, 226, 227, 230, 236	NO. 22 AWG STRANDED SINGLE CONDUCTOR, 2500V INSULATION
242, 263	NO.14 AWG STRANDED SINGLE CONDUCTOR, 2500V INSULATION (SHIELDED)
225, 231, 232	NO.16 AWG STRANDED SINGLE CONDUCTOR, 5000V INSULATION (SHIELDED)
244, 245	NO.20 AWG STRANDED SINGLE CONDUCTOR, 2500V INSULATION (SHIELDED)
120, 123, 163, 164, 178, 179, 211, 213	NO.22 AWG STRANDED SINGLE CONDUCTOR, 2500V INSULATION (SHIELDED)
233-235	TEFLON COAX RG-U/141
251, 253, 255, 257, 259	NO.18 AWG SOLID COPPER, TINNED (BUS) WIRE

NOTES:

1. SHIELD GROUNDS ARE NO.20 AWG STRANDED SINGLE CONDUCTOR, BLACK, 2500V INSULATION
2. POINT TO POINT WIRING ON E-601 IS NO.16 AWG STRANDED SINGLE CONDUCTOR, BLACK, 2500V INSULATION
3. ALL GROUND LEADS AT EACH CONNECTOR ASSEMBLY ARE CONNECTED TO THE GROUND TERMINAL FOR EACH ASSEMBLY
4. GROUND LEADS OF P-604, P-605, P-606 AND P-608 CONNECT TO THE NEAREST GROUND TERMINAL OF CORRESPONDING CONNECTOR ASSEMBLY
5. SPECIAL COLOR — ABBREVIATION
   CLEAR — CLR
   TAN — TAN
   PINK — PINK

Figure 7-167. Electrical Equipment Cabinet CY-1571/SRT (100 W. Frame), Wiring Diagram

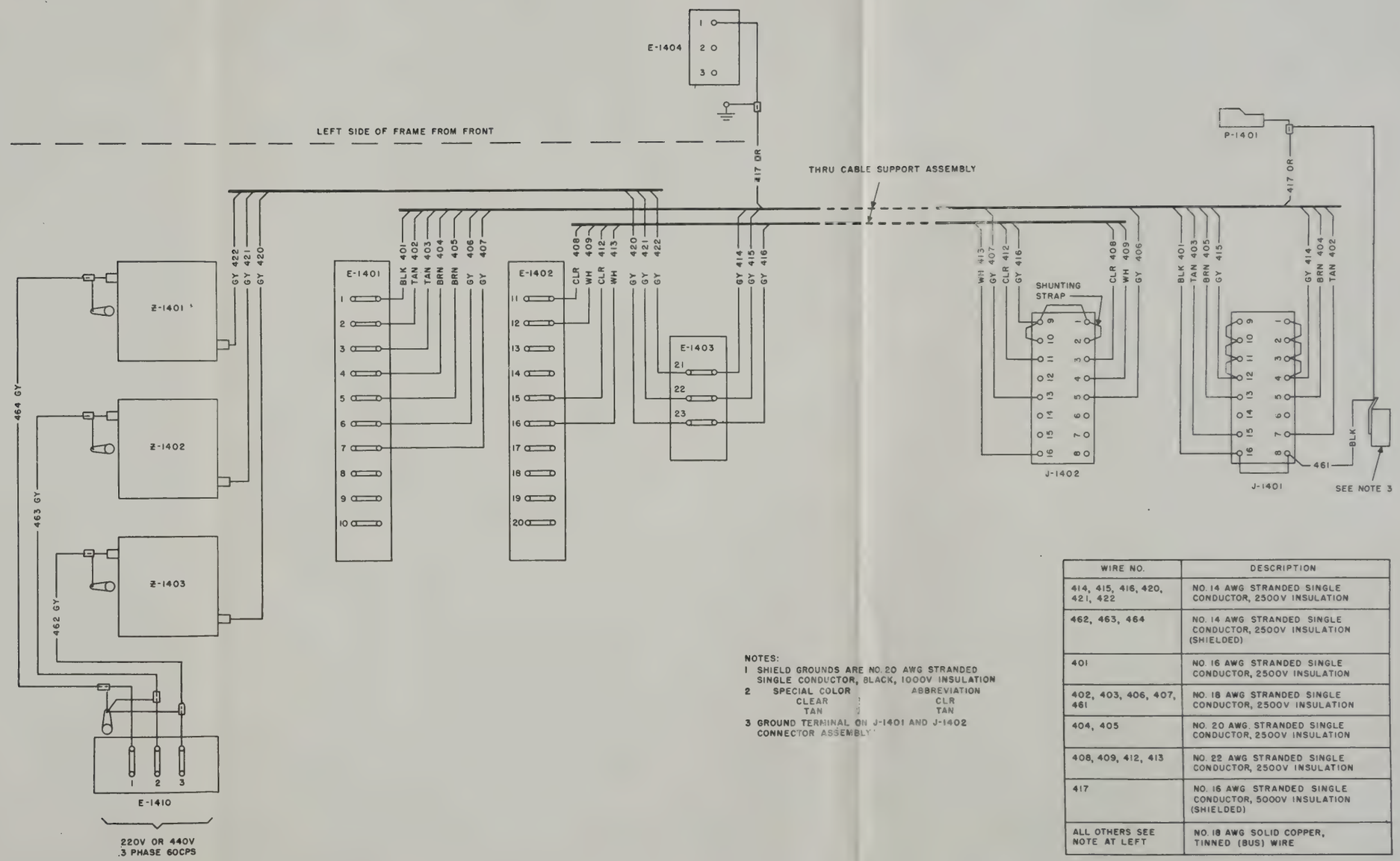

NOTES:
1 SHIELD GROUNDS ARE NO. 20 AWG STRANDED SINGLE CONDUCTOR, BLACK, 1000V INSULATION
2 SPECIAL COLOR ABBREVIATION
CLEAR CLR
TAN TAN
3 GROUND TERMINAL ON J-1401 AND J-1402 CONNECTOR ASSEMBLY

WIRE NO.	DESCRIPTION
414, 415, 416, 420, 421, 422	NO. 14 AWG STRANDED SINGLE CONDUCTOR, 2500V INSULATION
462, 463, 464	NO. 14 AWG STRANDED SINGLE CONDUCTOR, 2500V INSULATION (SHIELDED)
401	NO. 16 AWG STRANDED SINGLE CONDUCTOR, 2500V INSULATION
402, 403, 406, 407, 461	NO. 18 AWG STRANDED SINGLE CONDUCTOR, 2500V INSULATION
404, 405	NO. 20 AWG. STRANDED SINGLE CONDUCTOR, 2500V INSULATION
408, 409, 412, 413	NO. 22 AWG STRANDED SINGLE CONDUCTOR, 2500V INSULATION
417	NO. 16 AWG STRANDED SINGLE CONDUCTOR, 5000V INSULATION (SHIELDED)
ALL OTHERS SEE NOTE AT LEFT	NO. 18 AWG SOLID COPPER, TINNED (BUS) WIRE

Figure 7–169. Electrical Equipment Cabinet CY–1573/SRT (HVPS Frame), Wiring Diagram

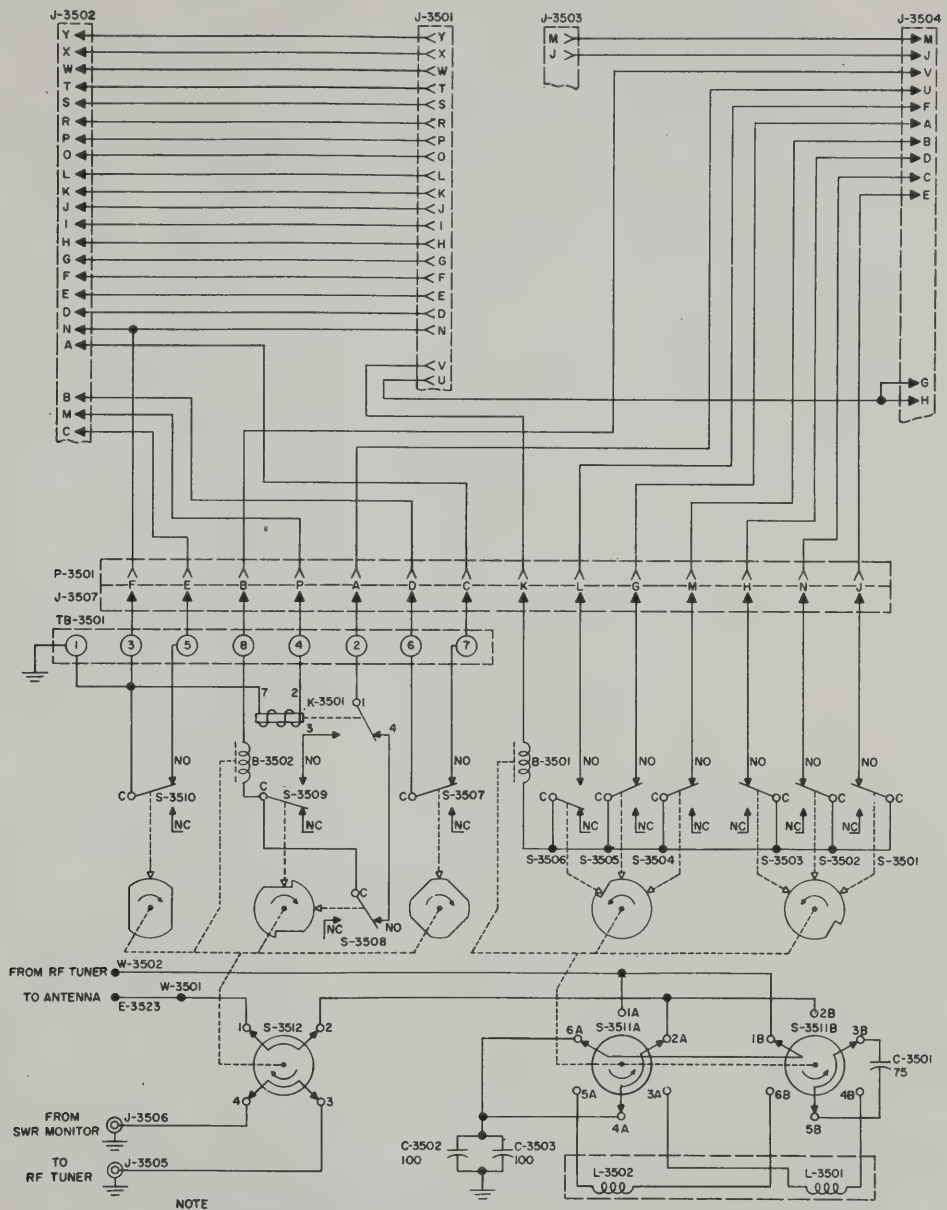

Figure 7—170. Antenna Coupler CU-372/SRT, Schematic Diagram

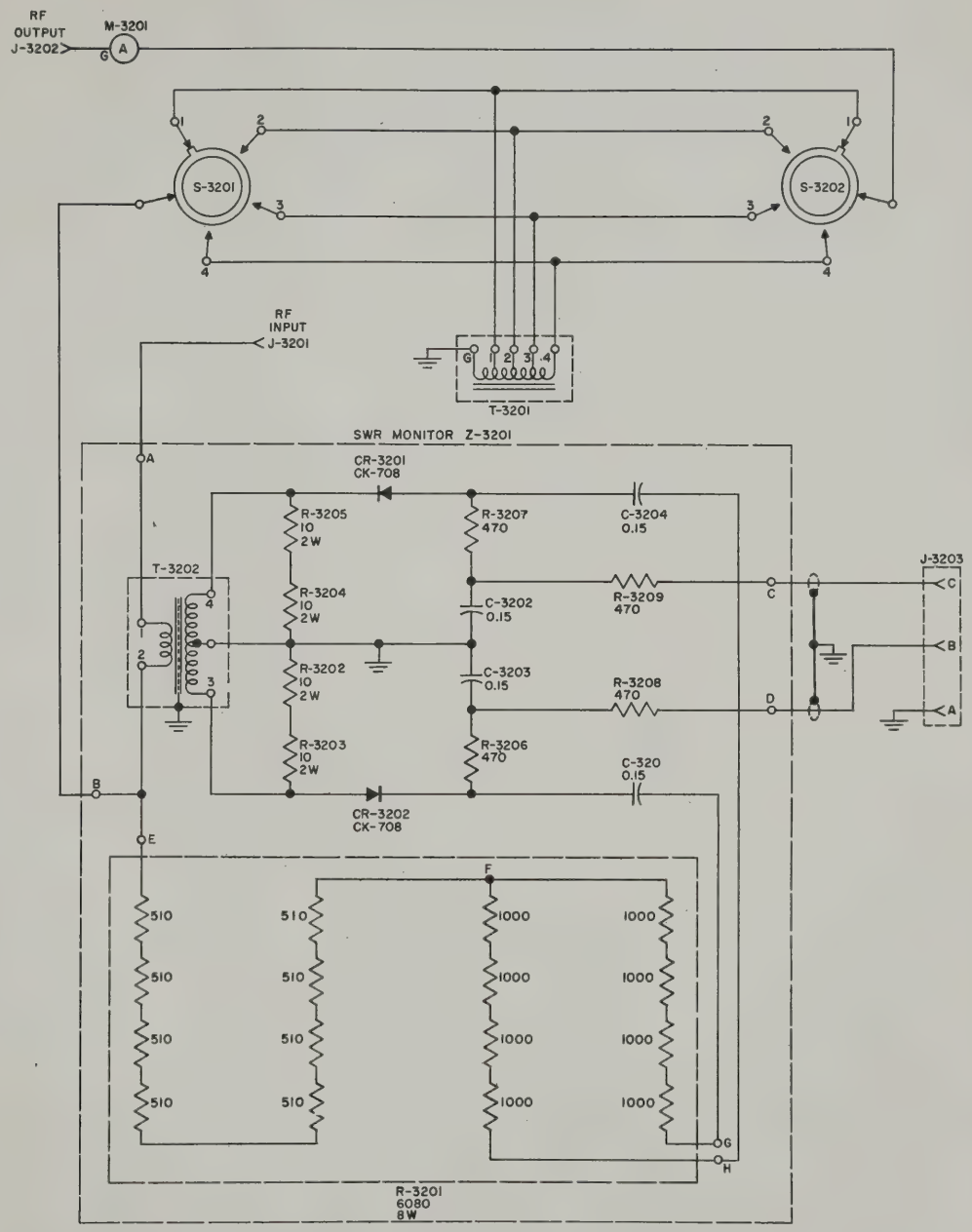

NOTE:
RESISTANCE IN OHMS, CAPACITANCE IN MICROFARADS, UNLESS OTHERWISE INDICATED.

Figure 7—174. Transmitter Coupler CU—402/SRT, Schematic Diagram

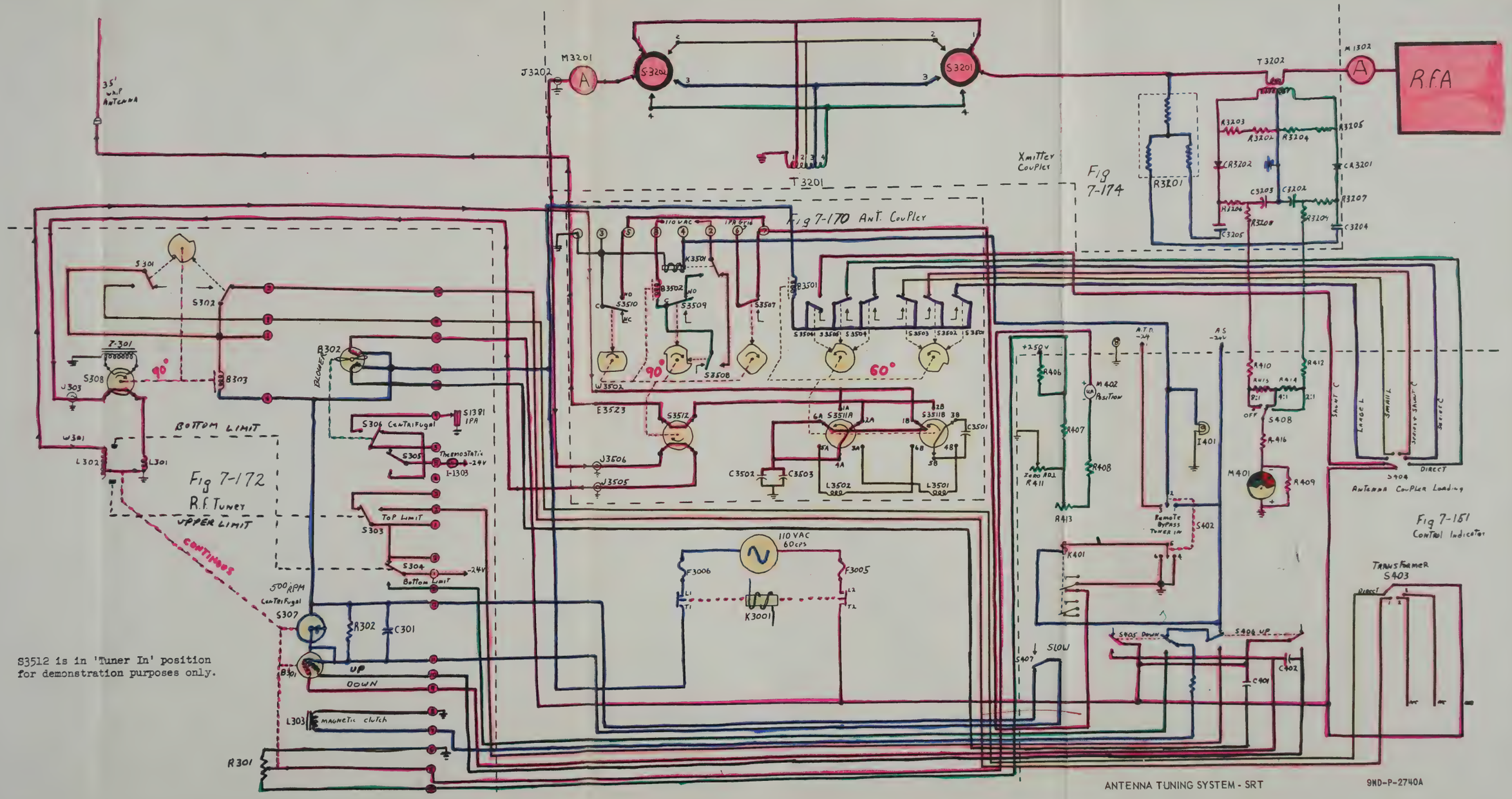

ANTENNA TUNING SYSTEM - SRT

9ND-P-2740A

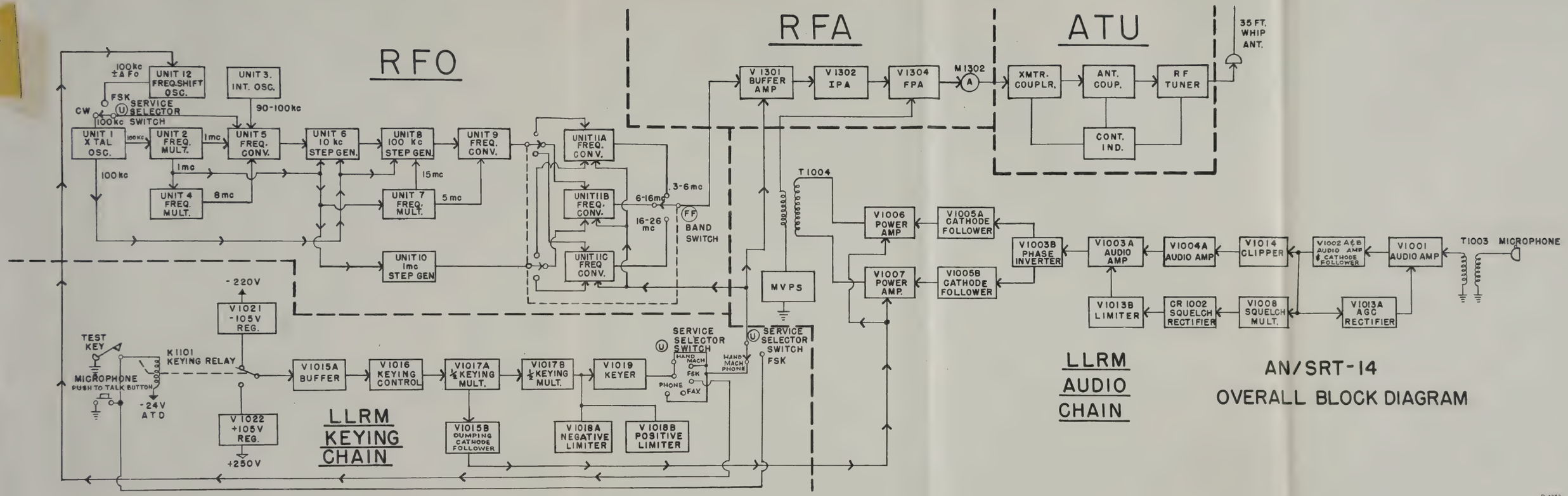
RFO
RFA
ATU
UNIT 12 FREQ. SHIFT OSC.
100kc ±ΔFo
UNIT 3. INT. OSC.
90-100kc
FSK
CW
SERVICE SELECTOR SWITCH
100kc
UNIT 1 X TAL OSC.
UNIT 2 FREQ. MULT.
UNIT 5 FREQ. CONV.
UNIT 6 10 kc STEP GEN.
UNIT 8 100 Kc STEP GEN.
UNIT 9 FREQ. CONV.
UNIT 11A FREQ. CONV.
UNIT 11B FREQ. CONV.
UNIT 11C FREQ CONV.
UNIT 4 FREQ. MULT.
UNIT 7 FREQ. MULT.
UNIT 10 1mc STEP GEN
1mc
8mc
15mc
5mc
3-6mc
6-16mc
16-26 mc
BAND SWITCH
V 1301 BUFFER AMP
V 1302 IPA
V 1304 FPA
M 1302
XMTR. COUPLR.
ANT. COUP.
RF TUNER
CONT. IND.
35 FT. WHIP ANT.
T 1004
MVPS
V1006 POWER AMP
V1007 POWER AMP.
V1005A CATHODE FOLLOWER
V1005B CATHODE FOLLOWER
V1003B PHASE INVERTER
V1003A AUDIO AMP
V1004A AUDIO AMP
V1014 CLIPPER
V1002 A&B AUDIO AMP & CATHODE FOLLOWER
V1001 AUDIO AMP
T1003
MICROPHONE
V1013B LIMITER
CR 1002 SQUELCH RECTIFIER
V1008 SQUELCH MULT.
V1013A AGC RECTIFIER
-220V
V1021 -105V REG.
TEST KEY
K1101 KEYING RELAY
MICROPHONE
PUSH TO TALK BUTTON
-24V ATD
V1022 +105V REG.
+250V
V1015A BUFFER
V1016 KEYING CONTROL
V1017A ½ KEYING MULT.
V1017B ½ KEYING MULT.
V1019 KEYER
SERVICE SELECTOR SWITCH
HAND MACH
FSK
FAX
PHONE
HAND MACH PHONE
SERVICE SELECTOR SWITCH FSK
V1015B DUMPING CATHODE FOLLOWER
V1018A NEGATIVE LIMITER
V1018B POSITIVE LIMITER
LLRM KEYING CHAIN
LLRM AUDIO CHAIN
AN/SRT-14
OVERALL BLOCK DIAGRAM
P-4363

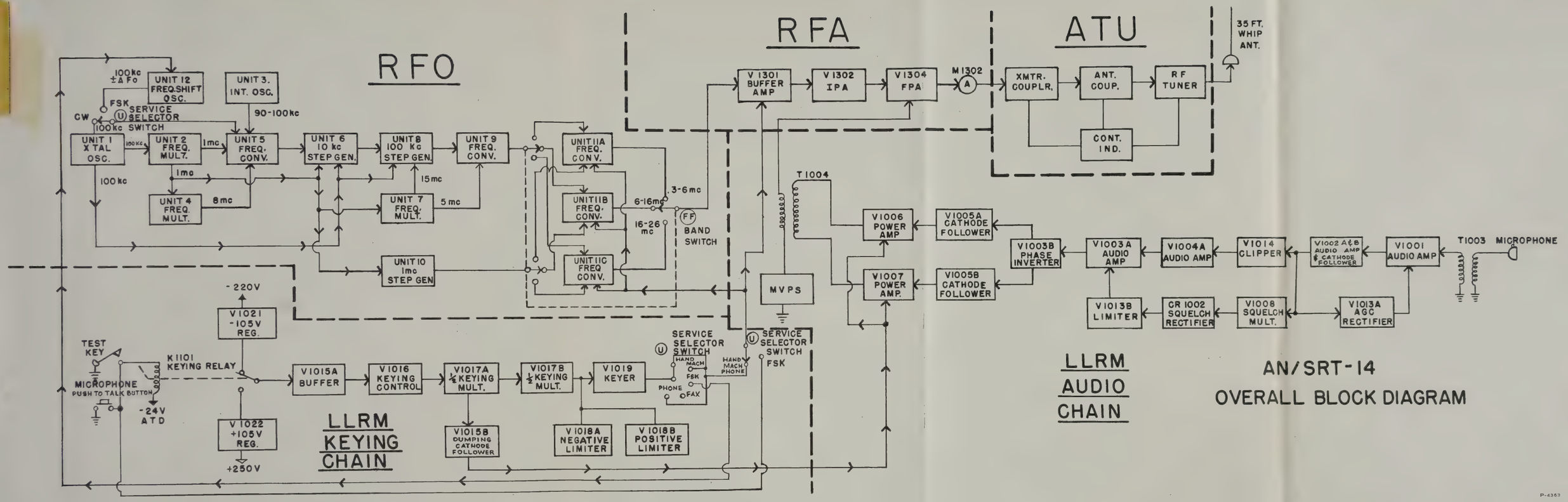
RFO
RFA
ATU
35 FT. WHIP ANT.
UNIT 12 FREQ.SHIFT OSC.
UNIT 3. INT. OSC.
100kc ±Δ Fo
FSK
CW
SERVICE SELECTOR SWITCH
90-100kc
UNIT 1 X TAL OSC.
UNIT 2 FREQ. MULT.
UNIT 5 FREQ. CONV.
UNIT 6 10 kc STEP GEN.
UNIT 8 100 Kc STEP GEN.
UNIT 9 FREQ. CONV.
UNIT 11A FREQ. CONV.
UNIT 11B FREQ. CONV.
UNIT 11C FREQ CONV.
UNIT 4 FREQ. MULT.
UNIT 7 FREQ. MULT.
UNIT 10 1mc STEP GEN
100 kc
1mc
8mc
15mc
5 mc
6-16mc
3-6mc
16-26 mc
BAND SWITCH
V 1301 BUFFER AMP
V 1302 IPA
V 1304 FPA
M1302
XMTR. COUPLR.
ANT. COUP.
RF TUNER
CONT. IND.
T1004
V1006 POWER AMP
V1007 POWER AMP.
V1005A CATHODE FOLLOWER
V1005B CATHODE FOLLOWER
V1003B PHASE INVERTER
V1003A AUDIO AMP
V1004A AUDIO AMP
V1014 CLIPPER
V1002 A&B AUDIO AMP & CATHODE FOLLOWER
V1001 AUDIO AMP
T1003
MICROPHONE
V1013B LIMITER
CR 1002 SQUELCH RECTIFIER
V1008 SQUELCH MULT.
V1013A AGC RECTIFIER
MVPS
SERVICE SELECTOR SWITCH
HAND MACH
FSK
PHONE
FAX
SERVICE SELECTOR SWITCH FSK
-220V
V1021 -105V REG.
TEST KEY
K1101 KEYING RELAY
MICROPHONE PUSH TO TALK BUTTON
-24V ATD
V1022 +105V REG.
+250V
V1015A BUFFER
V1016 KEYING CONTROL
V1017A ½ KEYING MULT.
V1017B ½ KEYING MULT.
V1019 KEYER
V1015B DUMPING CATHODE FOLLOWER
V1018A NEGATIVE LIMITER
V1018B POSITIVE LIMITER
LLRM KEYING CHAIN
LLRM AUDIO CHAIN
AN/SRT-14
OVERALL BLOCK DIAGRAM
P-4363

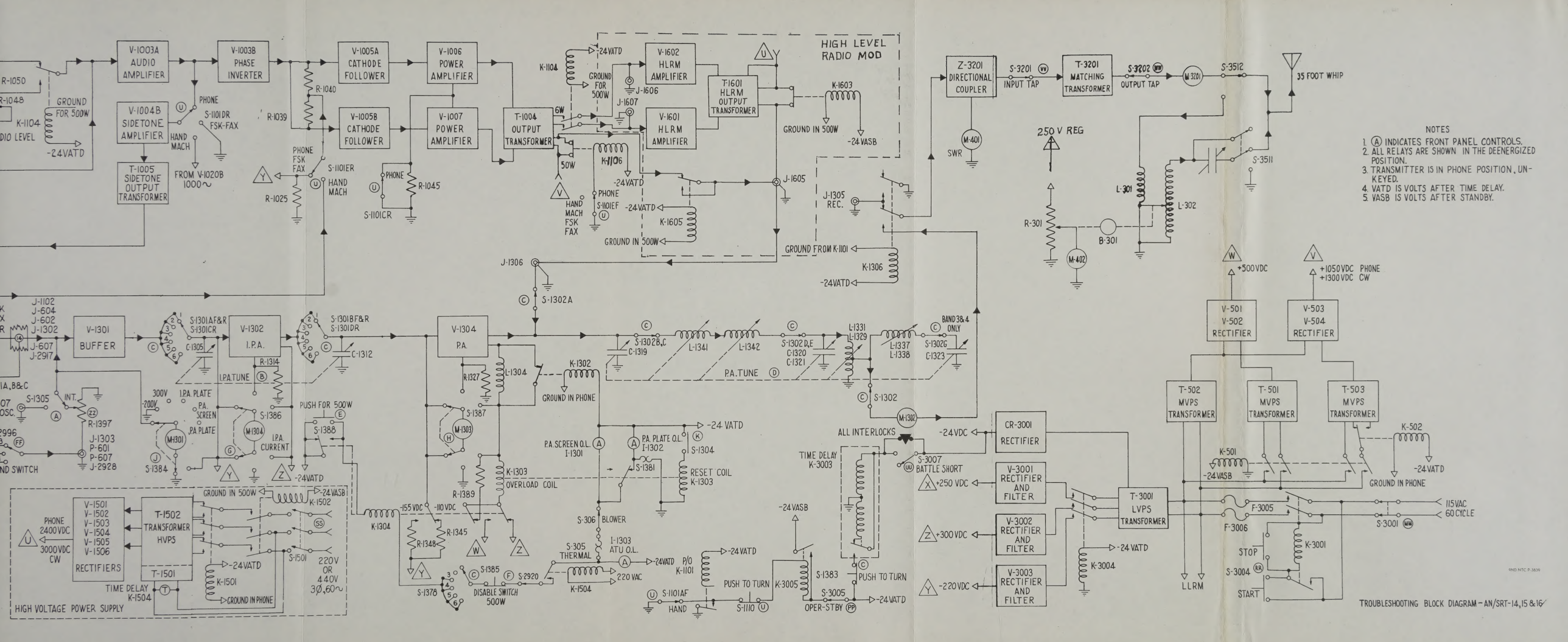
HIGH LEVEL RADIO MOD
V-1003A AUDIO AMPLIFIER
V-1003B PHASE INVERTER
V-1004B SIDETONE AMPLIFIER
T-1005 SIDETONE OUTPUT TRANSFORMER
V-1005A CATHODE FOLLOWER
V-1005B CATHODE FOLLOWER
V-1006 POWER AMPLIFIER
V-1007 POWER AMPLIFIER
T-1004 OUTPUT TRANSFORMER
V-1602 HLRM AMPLIFIER
V-1601 HLRM AMPLIFIER
T-1601 HLRM OUTPUT TRANSFORMER
Z-3201 DIRECTIONAL COUPLER
T-3201 MATCHING TRANSFORMER
35 FOOT WHIP
250 V REG
V-1301 BUFFER
V-1302 I.P.A.
V-1304 P.A.
P.A. TUNE
I.P.A. TUNE
RESET COIL K-1303
OVERLOAD COIL
GROUND IN PHONE
ALL INTERLOCKS
TIME DELAY K-3003
CR-3001 RECTIFIER
V-3001 RECTIFIER AND FILTER
V-3002 RECTIFIER AND FILTER
V-3003 RECTIFIER AND FILTER
T-3001 LVPS TRANSFORMER
V-501 V-502 RECTIFIER
V-503 V-504 RECTIFIER
T-502 MVPS TRANSFORMER
T-501 MVPS TRANSFORMER
T-503 MVPS TRANSFORMER
+500VDC
+1050VDC PHONE
+1300VDC CW
115VAC 60CYCLE
STOP
START
LLRM
HIGH VOLTAGE POWER SUPPLY
V-1501 V-1502 V-1503 V-1504 V-1505 V-1506 RECTIFIERS
T-1502 TRANSFORMER HVPS
T-1501 TIME DELAY K-1504
PHONE 2400VDC
3000VDC CW
220V OR 440V 3Ø,60~
DISABLE SWITCH 500W
PUSH TO TURN
OPER-STBY
BLOWER
THERMAL
ATU O.L.
P.A. SCREEN O.L.
P.A. PLATE O.L.
NOTES
1. (A) INDICATES FRONT PANEL CONTROLS.
2. ALL RELAYS ARE SHOWN IN THE DEENERGIZED POSITION.
3. TRANSMITTER IS IN PHONE POSITION, UNKEYED.
4. VATD IS VOLTS AFTER TIME DELAY.
5. VASB IS VOLTS AFTER STANDBY.
TROUBLESHOOTING BLOCK DIAGRAM - AN/SRT-14,15 & 16

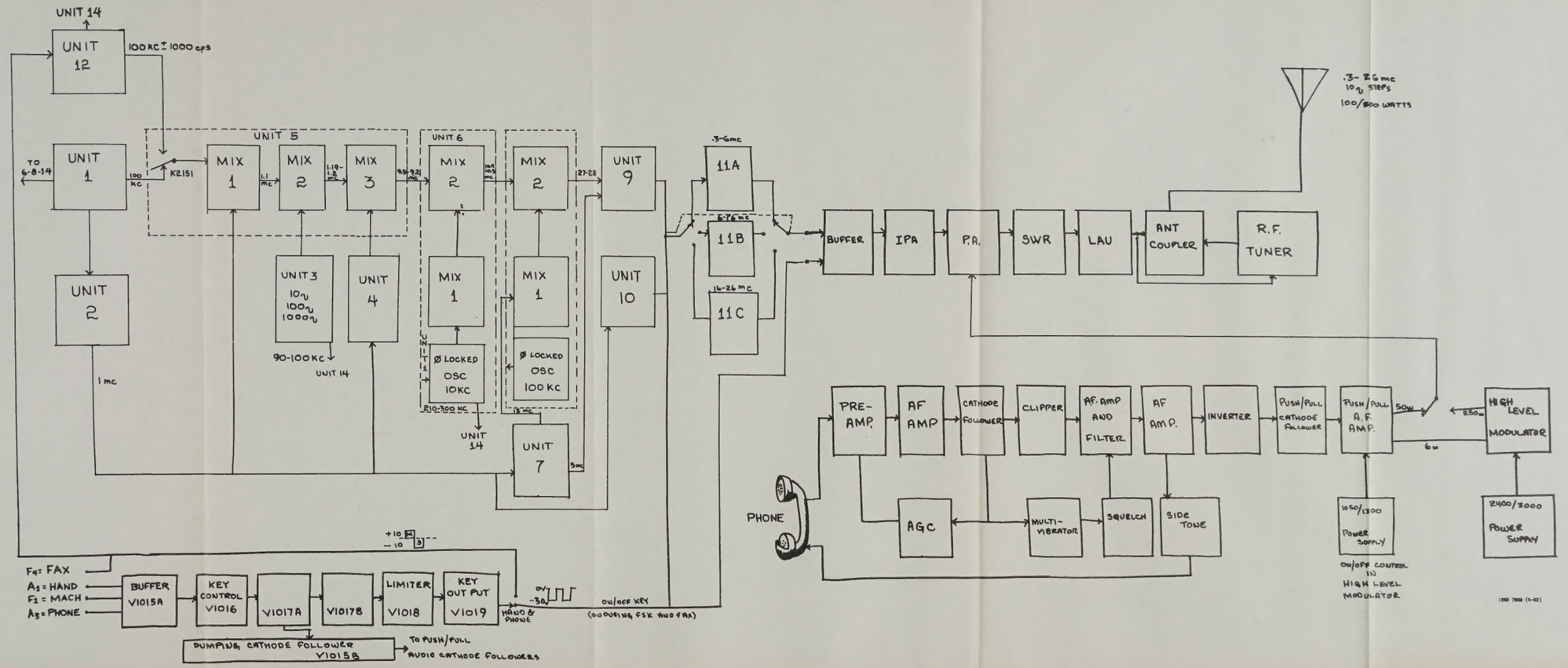

AN/SRT-15 GENERAL BLOCK DIAGRAM

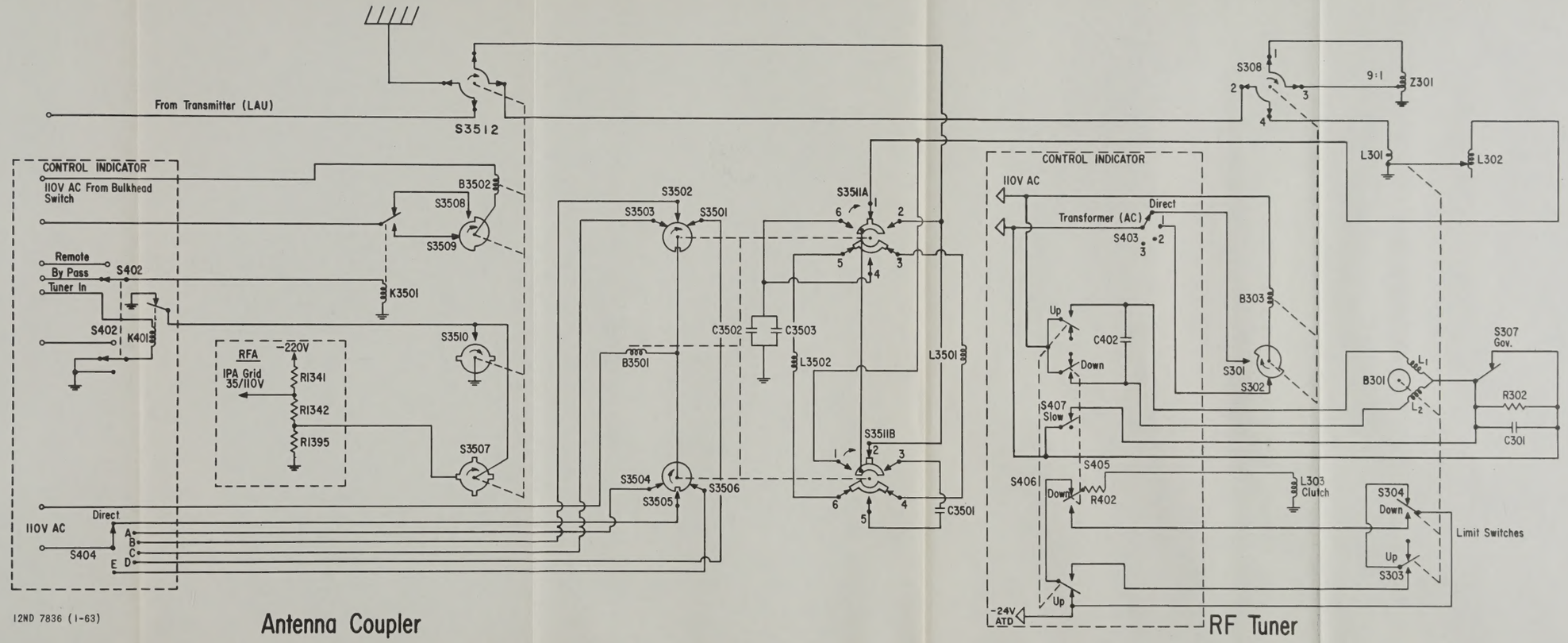

12ND 7836 (1-63)

AN/SRT
Antenna Coupler, RF Tuner

211-540

Antenna Coupler